8010A/8012A

Digital Multimeters

Instruction Manual

P/N 491944
August 1978 Rev 2 1/85
©1985, John Fluke Mfg. Co., Inc. All rights reserved. Litho in U.S.A.

FLUKE®

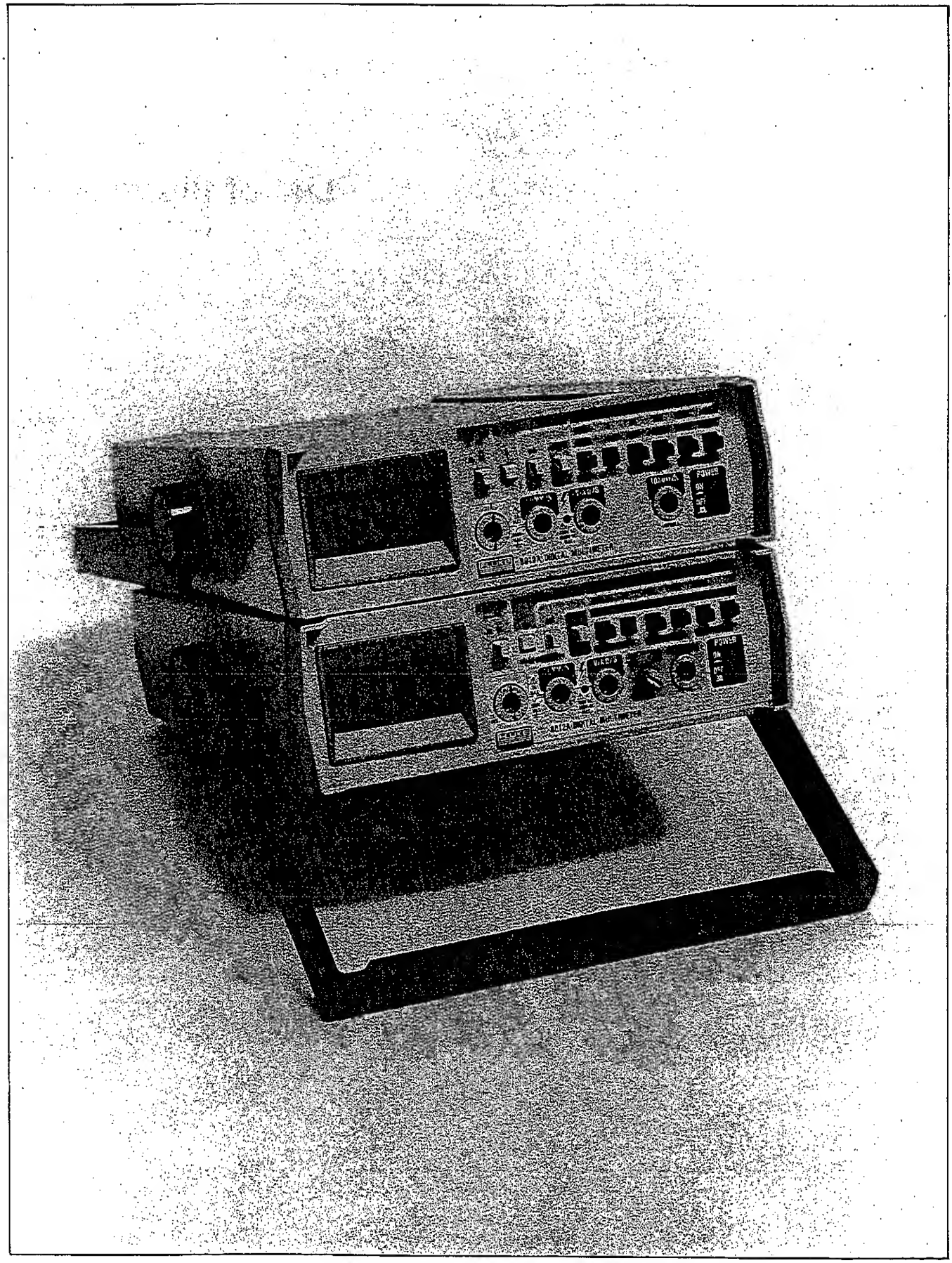

8010A/8012A Digital Multimeters

Section 1
Introduction and Specifications

1-1. INTRODUCTION

1-2. This manual contains complete operating and maintenance instructions for the Fluke Models 8010A and 8012A Digital Multimeters. The information presented in this manual reflects both instruments except where indicated by a particular model number. The term Multimeter is used throughout this manual to indicate both the 8010A and the 8012A.

1-3. The Multimeters are portable bench-type digital multimeters (DMMs) with 3-1/2 digit liquid crystal displays (LCDs). The Multimeters have the following industry-standard features:

- Voltage measurements from 100 μV to 1000V dc and 10 mV to 750V true-rms ac.
- Current measurements from 100 nA to 2A dc and 10 μA to 2A true-rms ac (up to 10A for the 8012A).
- Resistance measurements from 100 mΩ (1 mΩ for the 8012A) to 20 MΩ.

The Multimeters also have the following special measurement features:

- Conductance measurements up to 10,000 MΩ of equivalent resistance.
- Resistance ranges that supply enough voltage to turn on a PN junction for testing diodes and transistors.
- Automatic polarity indication and overrange indication.
- Protection from overloads and transients up to 6 kV for 10 microseconds.
- Dual-slope integration a/d conversion to ensure noise-free measurements.
- Long term calibration stability (1 year).

1-4. Your Multimeter is warranted for a period of one year upon shipment of the instrument to the original purchaser. Conditions of the warranty are given at the front of this manual.

1-5. OPTIONS and ACCESSORIES

1-6. The use of your Multimeter can be enhanced by the options and accessories available for these instruments. The options and accessories are listed in Table 1-1. The Multimeters can be ordered with the Option 8010A-01 or 8012A-01 Rechargeable Battery. Detailed information on options and accessories is contained in Section 6 of this manual.

1-7. SPECIFICATIONS

1-8. Specifications for the Multimeters are listed in Table 1-2. Specifications for the Option 8010A-01 or Option 8012A-01 and other accessory specifications are given in Section 6 of this manual.

Table 1-1. 8010A/8012A Options and Accessories

MODEL	DESCRIPTION	MODEL	DESCRIPTION
C86	Ruggedized Carrying Case	80J-10	Current Shunt
Y8205	Soft Carrying Case	80K-6	High Voltage Probe
M00-200-611	Offset Mounting Kit	80K-40	High Voltage Probe
M00-200-612	Center Mounting Kit	83-RF	RF Probe
M00-200-613	Dual Mounting Kit	85-RF	RF Probe
80T-H	Touch-Hold Probe	Y8100	DC/AC Current Probe
80T-150C	Temperature Probe, Celsius	Y8101	AC Current Transformer
80T-150F	Temperature Probe, Fahrenheit	Y8133	Deluxe Test Lead Set
80i-400	AC Current Probe	Y8140	Slim-Flex Test Leads
80i-600	AC Current Probe	8010A-01	Rechargeable Battery Option for 8010A
		8012A-01	Rechargeable Battery Option for 8012A

Table 1-2. 8010A/8012A Specifications

ELECTRICAL ..... The electrical specifications given apply for an operating temperature of 18°C to 28°C (64.4°F to 82.4°F), relative humidity up to 90%, and a 1-year calibration cycle.

Functions ..... DC Volts, AC Volts, DC Current, AC Current Resistance and Conductance.

DC Volts

RANGE	RESOLUTION	ACCURACY for 1-Year
±200 mV	100 μV	±(0.1% of reading + 1 digit)
±2V	1 mV	
±20V	10 mV	
±200V	100 mV	
±1000V	1V	

INPUT IMPEDANCE ..... 10 MΩ, all ranges.

NORMAL MODE REJECTION RATIO .... >60 dB at 60 Hz (at 50 Hz with 50 Hz Option).

COMMON MODE REJECTION RATIO .... >90 dB at dc, 50 Hz and 60 Hz.
(1 kΩ unbalanced)

OVERVOLTAGE PROTECTION ..... 1000V dc or peak ac on all ranges.

RESPONSE TIME ..... 1 second.

AC Volts (True RMS Responding)

RANGE	RESOLUTION	ACCURACY for 1-Year (5% of Range to Full Range)			
		45 Hz to 1 kHz	45 Hz to 10 kHz	10 kHz to 20 kHz	20 kHz to 50 kHz
200 mV	100 μV	±(0.5% of reading + 2 digits)		±(1,0% of reading + 2 digits)	±(5% of reading + 3 digits)
2V	1 mV				
20V	10 mV				
200V	0.1V				
750V	1V	±(0.5% of reading + 2 digits)	NOT SPECIFIED		

Table 1-2. 8010A/8012A Specifications (cont)

AC Volts, continued

VOLT-Hz PRODUCT ..... 10^7 max (200V max @ 50 kHz).

EXTENDED FREQUENCY RESPONSE ... Typically ±3 dB at 200 kHz.

COMMON MODE NOISE REJECTION RATIO (1 kΩ unbalance) ..... >60 dB at 50 Hz and 60 Hz.

CREST FACTOR RANGE ..... 1.0 to 3.0.

INPUT IMPEDANCE ..... 10 MΩ in parallel with <100 pF.

OVERLOAD PROTECTION ..... 750V rms or 1000V peak continuous not to exceed the volt-hertz product of 10^7 (except 10 seconds maximum on 200 mV, 2V ranges).

RESPONSE TIME ..... 2 seconds maximum within a range.

DC Current

RANGE	RESOLUTION	ACCURACY for 1-Year	BURDEN VOLTAGE
200 μA	0.1 μA	±(0.3% of reading +1 digit)	0.3V max.
2 mA	1 μA		
20 mA	10 μA		
200 mA	100 μA		
2000 mA	1 mA		0.9V max.

OVERLOAD PROTECTION ..... 2A/250V fuse in series with 3A/600V fuse (for high energy sources).

AC Current (True RMS Responding AC Coupled)

RANGE	RESOLUTION	ACCURACY: from 5% of range to full-scale, 1-Year			BURDEN VOLTAGE
		45 Hz to 2 kHz	45 Hz to 10 kHz	10 kHz to 20 kHz	
200 μA	0.1 μA	±(1% of reading +2 digits)		±(2% of reading +2 digits)	0.3V rms max.
2 mA	1 μA				
20 mA	10 μA				
200 mA	100 μA				
2000 mA	1 mA	±(1% of reading +2 digits)			0.9V rms max.

OVERLOAD PROTECTION ..... 2A/250V fuse in series with 3A/600V fuse (for high energy sources).

CREST FACTOR RANGE ..... 1.0 to 3.0

High Current 8010A Only

RANGE	RESOLUTION	ACCURACY: for 1-Year	BURDEN VOLTAGE
10A dc	10 mA	±(0.5% of reading + 1 digit)	0.5V max.
10A Trms ac	10 mA	45 Hz to 2 kHz ±(1% of reading + 2 digits)	0.5V rms max.

OVERLOAD ..... 12A maximum unfused.

Table 1-2. 8010A/8012A Specifications (cont)

Resistance

RANGE	RESOLUTION	ACCURACY: for 1-Year	FULL-SCALE VOLTAGE	MAXIMUM TEST CURRENT
200 Ω	0.1Ω	±(0.2% of reading +1 digit)	<0.25V	1.3 mA
2 kΩ ⊣▶⊢	1Ω		>1.0V	1.3 mA
20 kΩ	10Ω		<0.25V	10 μA
200 kΩ ⊣▶⊢	100Ω		>1.0V	35 μA
2000 kΩ	1 kΩ	±(0.5% of reading +1 digit)	<0.25V	0.10 μA
20 MΩ ⊣▶⊢	10 kΩ		>1.5V	0.35 μA

OVERLOAD PROTECTION ..... 300V dc/ac rms on all ranges.

OPEN CIRCUIT VOLTAGE ..... Less than 3.5V on all ranges.

RESPONSE TIME ..... 1 second all ranges except 4 seconds on the 2000 kΩ and 20 MΩ ranges.

DIODE TEST ..... These three ranges have enough voltage to turn on silicon junctions to check for proper forward-to-back resistance. The 2 kΩ range is preferred and is marked with a larger diode symbol on the front panel of the instrument. The three non-diode test ranges will not turn on silicon junctions so in-circuit resistance measurements can be made with these three ranges.

Low Resistance 8012A Only

RANGE	RESOLUTION	ACCURACY: for 1-Year	FULL-SCALE VOLTAGE	MAXIMUM TEST CURRENT
2Ω (LO Ohms)	1 mΩ	±(1% of reading +2 digits)	0.02V	10.5 mA
20Ω (LO Ohms)	10 mΩ	±(0.5% of reading +2 digits)	0.2V	10.5 mA

OVERLOAD PROTECTION ..... 300V dc/ac rms on all ranges.

RESPONSE TIME ..... 1 second maximum.

OPEN CIRCUIT VOLTAGE ..... 16V maximum on both ranges.

Conductance

RANGE	RESOLUTION	ACCURACY: for 1-Year	OPEN CIRCUIT VOLTAGE	MAXIMUM TEST CURRENT
2 mS	1 μS	±(0.2% of reading + 1 digit)	<3.5V	1.3 mA
20 μS	10 nS		<1V	10 μA
200 nS	.1 nS	±(1% of reading +10 digits)	<1V	0.10 μA

OVERLOAD PROTECTION ..... 300V dc/ac rms on all ranges.

CONDUCTANCE UNITS ..... We use the international unit of conductance, the Siemen = S = 1/Ω. Another unit of conductance is the mho.

Table 1-2. 8010A/8012A Specifications (cont)

ENVIRONMENTAL	
Temperature Coefficient	<0.1 times the applicable accuracy specification per °C for 0°C to 18°C and 28°C to 50°C (32°F to 64.4°F and 50.4°F to 122°F).
Operating Temperature	0°C to 50°C (32°F to 122°F).
RELATIVE HUMIDITY	0 to 80%, 0°C to 35°C (32 to 95°F) on 2000 kΩ, 20 MΩ and 200 nS ranges. 0 to 90%, 0°C to 35°C (32 to 95°F) on all other ranges. 0 to 70%, 35°C to 50°C (95 to 122°F).
Storage Temperature	(without batteries): -40°C to +60°C (-40°F to +158°F) (with batteries): -40°C to +50°C (-40°F to +122°F)
RELATIVE HUMIDITY	0 to 90%, -40 to 50°C (-40 to +122°F) 0 to 90%, 50 to 60°C (122 to 140°F).
GENERAL	
Maximum Common Mode Voltage	500V dc or peak ac.
Power Requirements	90 to 132V or 200 to 264V at 50 Hz or 60 Hz. Line Model 2W. (Battery Model 3.5W.)
Size	(See Figure 1-1.)
Weight	
LINE MODEL	1.08 kg (2 lb 6 oz)
BATTERY MODEL	1.42 kg (3 lb, 6 oz)

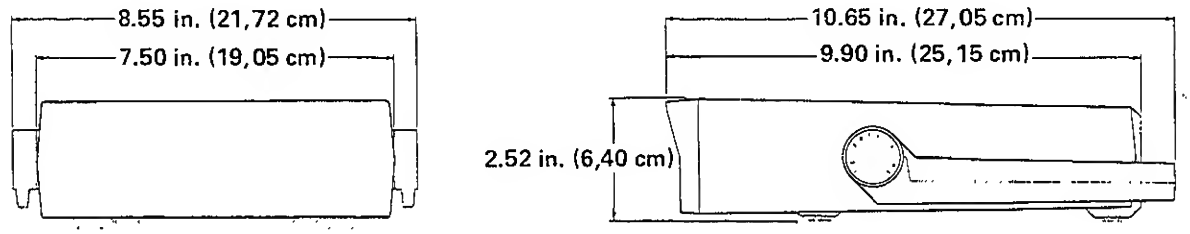

Figure 1-1. 8010A/8012A Dimensions

Section 2
Operation

2-1. INTRODUCTION

2-2. This section describes how to set up and make measurements with your Multimeter. Even though you may have used a multimeter before, we recommend that you read the entire section carefully so that you can use all of the features of your Multimeter.

2-3. SETTING UP YOUR INSTRUMENT

2-4. Unpacking

2-5. Your Multimeter is shipped in a special protective container that should prevent damage to the instrument during shipping. Check the shipping order against the contents of the container and report any damage or short shipment to the place of purchase or the nearest Fluke Technical Service Center. A list of these service centers is located in Section 5. The container should include the following:

- The 8010A or 8012A Multimeter
- Two test leads (one red and one black)
- Line power cord
- The 8010A/8012A Instruction Manual

2-6. If reshipment of the instrument is necessary, please use the original shipping container. If the original container is not available, be sure that adequate protection is provided to prevent damage during shipment. We recommend that the instrument be surrounded by at least three inches of shock-absorbing material on all sides of the container.

2-7. Remove the Multimeter from its container and place it in a convenient location. The carrying handle on the meter can be used as a prop-stand or positioned out of the way (behind the Multimeter). To position the handle, pull outward on the hubs of the handle and rotate the handle into position.

2-8. AC Line Voltage Requirements

2-9. AC line voltage requirements for your Multimeter are listed on a decal attached to the bottom of the instrument. Refer to Section 4 for the procedure to change the ac line voltage setting. If your Multimeter has the -01 Battery Option, refer to Section 6 for information on changing ac line voltages.

CAUTION

Do not connect the power cable to the instrument before verifying that the intended source matches the ac line configuration of the instrument.

2-10. Fuse Replacement

2-11. There is one, user-replaceable fuse (F1) in your Multimeter. The fuse (F1) and the fuse holder form an integral part of the mA input connector and can be removed with ordinary tools. The fuse rating is: 2A, normal blow (recommended part AGX2).

2-12. Use the following procedure to replace the fuse, F1:

1. Set the POWER switch to OFF.
2. Remove the input power cord from the Multimeter.

WARNING

DO NOT REPLACE THE FUSE WITH THE INSTRUMENT TURNED ON OR CONNECTED TO LINE POWER.

3. Refer to Figure 2-1, item 5 for the location of the fuse holder.

4. Using a coin or wide blade screwdriver, push in while turning the fuse holder in the direction of the arrow on the front panel decal.

5. Pull out the fuse holder and replace the defective fuse.

2-13. FRONT PANEL FEATURES

2-14. Before using your Multimeter, take a few minutes to become familiar with the use of its controls, indicators, and connectors. The front panel features are shown in Figure 2-1 and described in Table 2-1. The features of the Liquid Crystal Display (LCD) are also described in the following paragraphs.

2-15. LCD DISPLAY

2-16. The features of the Liquid Crystal Display (LCD) are shown in detail in Figure 2-2. The position of the floating decimal point is determined by the range selected. The maximum measurement value that can be displayed is one count less than the range selected (e.g., maximum measured voltage that can be displayed in the 200 mV range would be 199.9 mV).

2-17. To extend the life of the LCD and to ensure that the display will be ready to operate, observe the following precautions:

- Do not store or use the instrument in temperatures above or below those specified in Section 1.
- Do not store or use the instrument in humidity above that specified in Section 1.

NOTE

Low temperatures (within the specified operating limits) will cause the LCD response to be sluggish.

- Avoid prolonged exposure of the LCD to direct sunlight (ultraviolet).

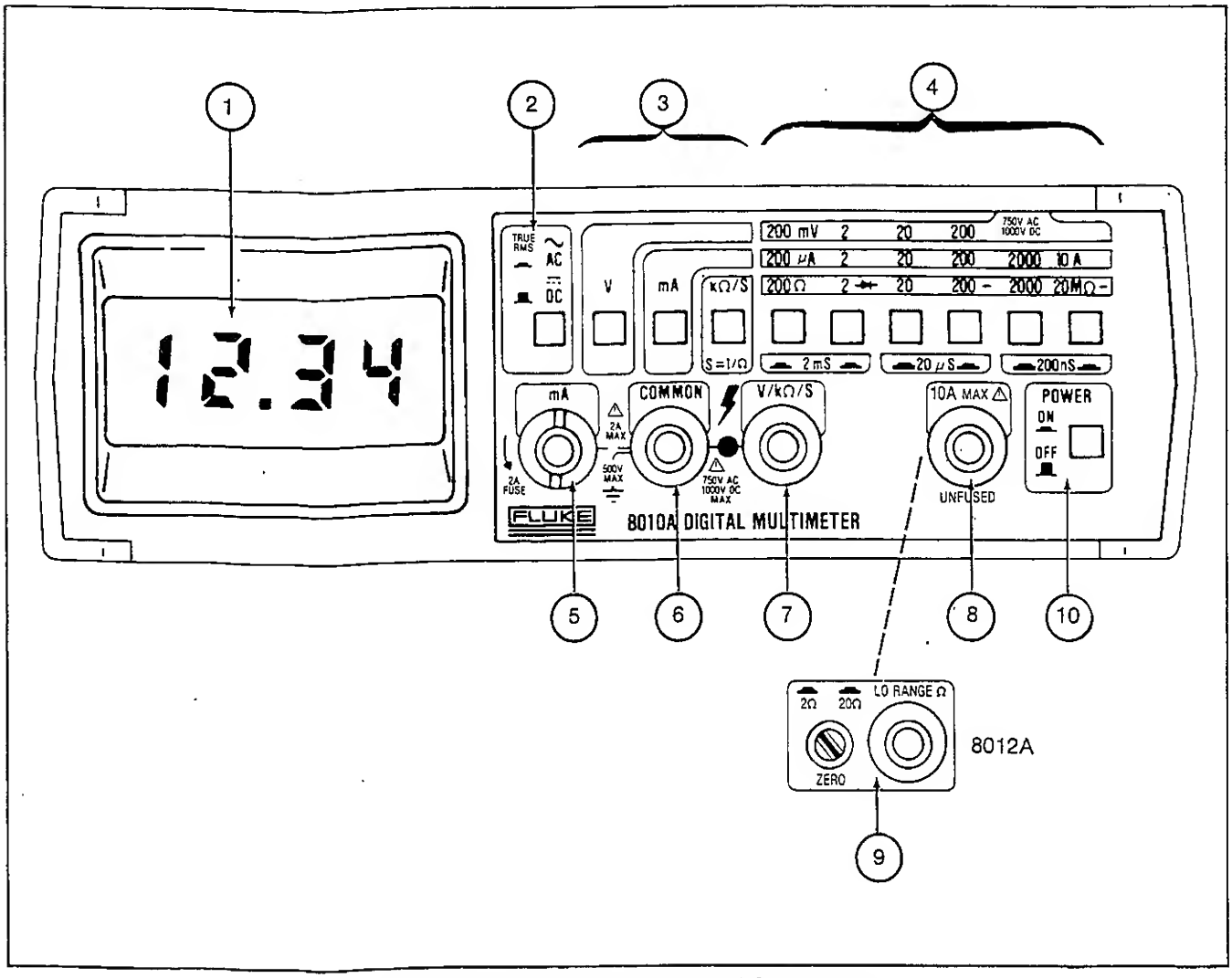

Figure 2-1. Controls, Indicators, and Connectors

Table 2-1. 8010A/8012A Controls, Indicators, and Connectors

ITEM NO.	NAME	FUNCTION
1	Display	3½-digit LCD display. Indicates measured input values and an overrange condition. (Also contains an annunciator for low battery charge, if the Rechargeable Battery Option is installed.)
2	AC/DC Function Switch	A two-position switch (push IN and push OUT) used to select ac (IN) or dc (OUT) for current or voltage measurement.
3	V/mA/kΩ/S Function Switches	Interlocked switches, used with the AC/DC Function switch to select the measurement functions. Pushing one switch will release the others. The conductance function is selected by pushing the kΩ switch and one of three pairs of Range Function switches. The Low Ohms feature of the 8012A is selected by pressing the V and mA switches simultaneously.
4	Range Switches	Interlocked switches that select the measurement ranges. Pushing a switch selects the corresponding range and releases a depressed switch(es).
5	mA Input Connector	A fuse protected, test lead connector for current measurements, less than 2A. Fuse is accessible from the front panel.
6	COMMON Input Connector	Test lead connector used as the low or common input for all measurement functions.
7	V/kΩ/S Input Connector	Test lead connector used as the high input for all voltage, resistance, continuity and conductance measurement functions.
8	10A Input Connector	Test lead connector used for the 10A Range current function of the 8010A.
9	Low Ohms Input Connector /ZERO Control	Test lead connector used for the Low Ohms resistance function of the 8012A. ZERO Control used to compensate for test lead resistance.
10	POWER Switch	Push-on/push-off switch. Used for energizing and de-energizing the instrument.

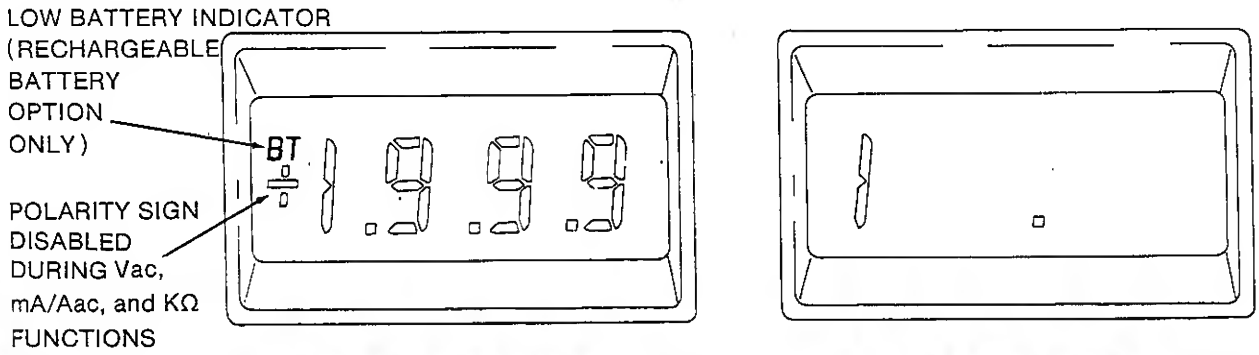

DISPLAY ANNUNCIATORS

OVERRANGE INDICATION

NOTE: Position of decimal point dependent on range selected.

Figure 2-2. Liquid Crystal Display

2-18. SIGNAL INPUT LIMITS

CAUTION

Exceeding the maximum signal input limits can damage the instrument.

2-19. Before using your Multimeter, it is important to note the maximum input limits that may bg applied to the instrument. Table 2-2 lists the maximum signal input levels for each function, range, and input connector.

WARNING

TO AVOID ELECTRICAL SHOCK, DO NOT CONNECT THE COMMON INPUT CONNECTOR TO ANY SOURCE MORE THAN 500V DC, OR 500V PEAK AC ABOVE EARTH GROUND.

2-20. OPERATING TECHNIQUES

2-21. The following paragraphs describe how to operate your Multimeter in each of its five primary measurement functions. Additional operating instructions and applications are given in the paragraphs on Applications, later in this section.

2-22. AC/DC Voltage (V)

2-23., Figure 2-3 describes how to operate your Multimeter for ac or dc voltage measurements. For all measurements, select the highest range that will provide the required resolution of the measurement. If measuring an unknown voltage, set the DMM on the highest range, then (if needed) select a lower range.

2-24. AC/DC Current (mA)

2-25. Figure 2-4 describes how to operate your Multimeter for ac or dc current measurements up to 2A. (The 10A Range current measurement feature of the 8010A is described in the following paragraph.) Turn off power to the circuit being measured before breaking the circuit and connecting the Multimeter in series with the current source. To minimize common mode voltages, break the circuit on the ground side of the current source. The mA input connector contains an in-line fuse. If the Multimeter does not respond when measuring current using the mA input connector, check the fuse (refer to the fuse replacement procedure earlier in this section). If measuring an unknown current, set the Multimeter on the highest range, then select a lower range if needed.

2-26. AC/DC Current (10A max, 8010A only)

CAUTION

The 10A input connector on the 8010A is not fused. Take extra precautions to not exceed the 10A maximum current handling ability of the 8010A.

2-27. Figure 2-5 describes how to operate the 8010A for ac or dc current measurements up to 10A. The 10A input connector on the 8010A is not fused. Observe the Caution given above. All other conditions for normal ac or dc current measurements, given in the preceding paragraph, apply to the 10A Range feature of the 8010A.

2-28. Resistance (Ω)

2-29. Figure 2-6 describes how to operate your Multimeter for resistance measurements. (The Low Ohms resistance feature of the 8012A is described in the following paragraph.) Erroneous measurements can occur if power is present in the resistance being measured. Ensure that power is removed and the circuits are discharged before measuring in-circuit resistances. The AC/DC function switch has no effect during resistance measurements.

2-30. Low Ohms Resistance (LO RANGE Ω, 8012A only)

2-31. Figure 2-7 describes how to operate the 8012A for low ohms resistance measurements. All other conditions for normal resistance measurements, given in the preceding paragraph, apply to the LO OHMS feature of the 8012A.

Table 2-2. Maximum Input-Signal Limits

FUNCTION SELECTED		RANGE SELECTED	INPUT TERMINALS	MAXIMUM INPUT OVERLOAD
V or dB	DC	ALL RANGES	V/kΩ/S and COMMON	1000V dc or peak ac
	AC	20V, 200V, 750V		750V rms continous or 10^7 V·Hz
		2V, 200 mV		750V rms for no longer than 15 seconds or 10^7 V·Hz
mA	DC or AC	ALL RANGES	mA and COMMON	Double fuse protected: 2A, 250V fuse in series with a 3A, 600V fuse
kΩ or S		ALL RANGES	V/kΩ/S and COMMON	500V dc or ac rms

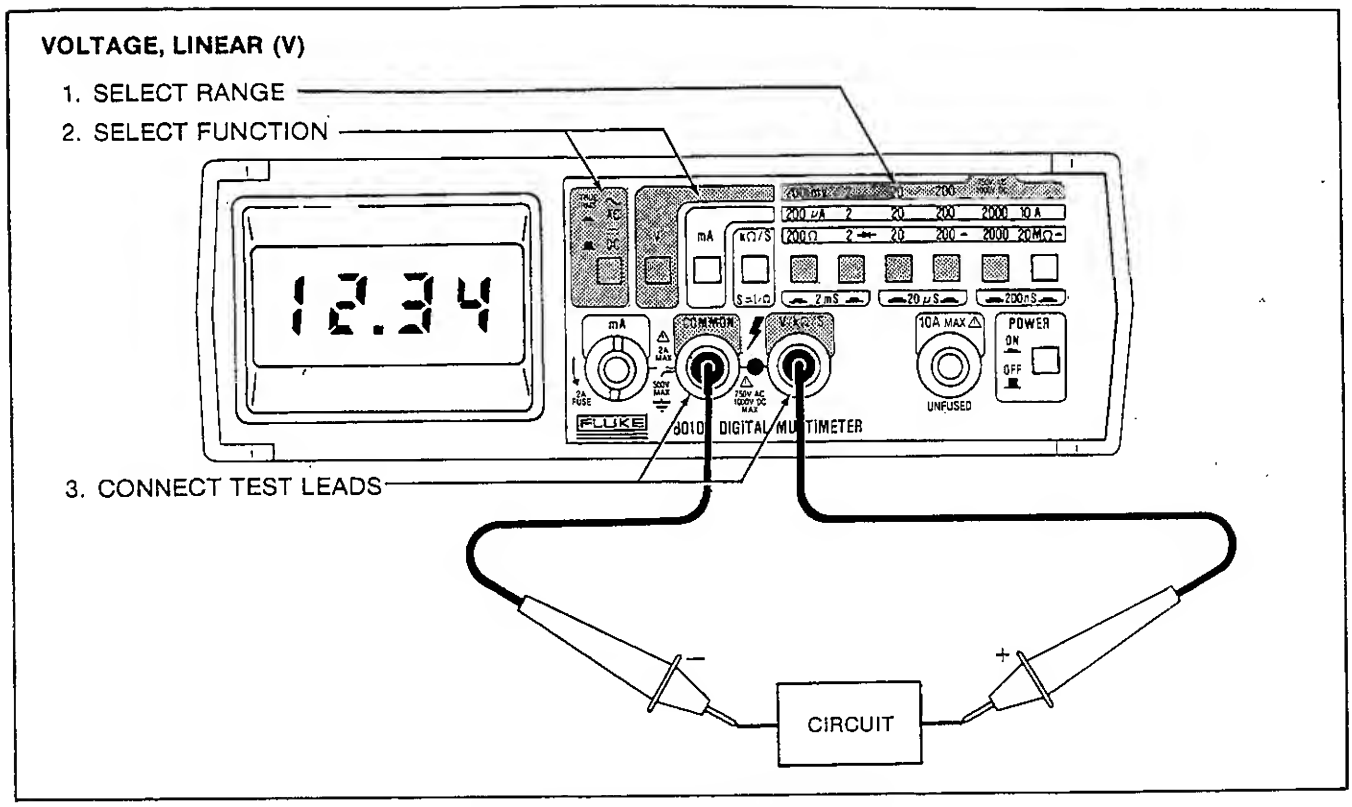

Figure 2-3. AC/DC Voltage Operation

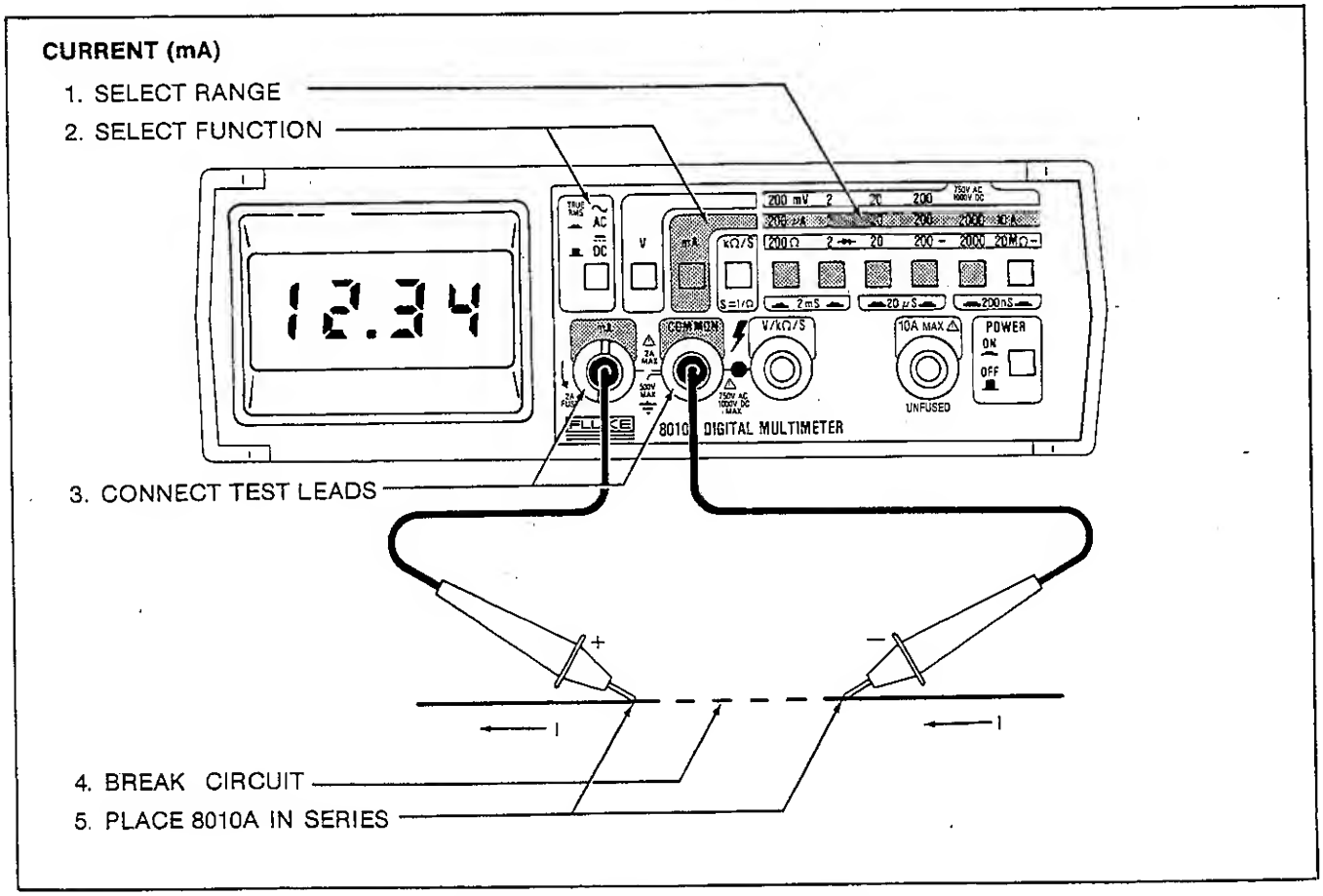

Figure 2-4. AC/DC Current Operation

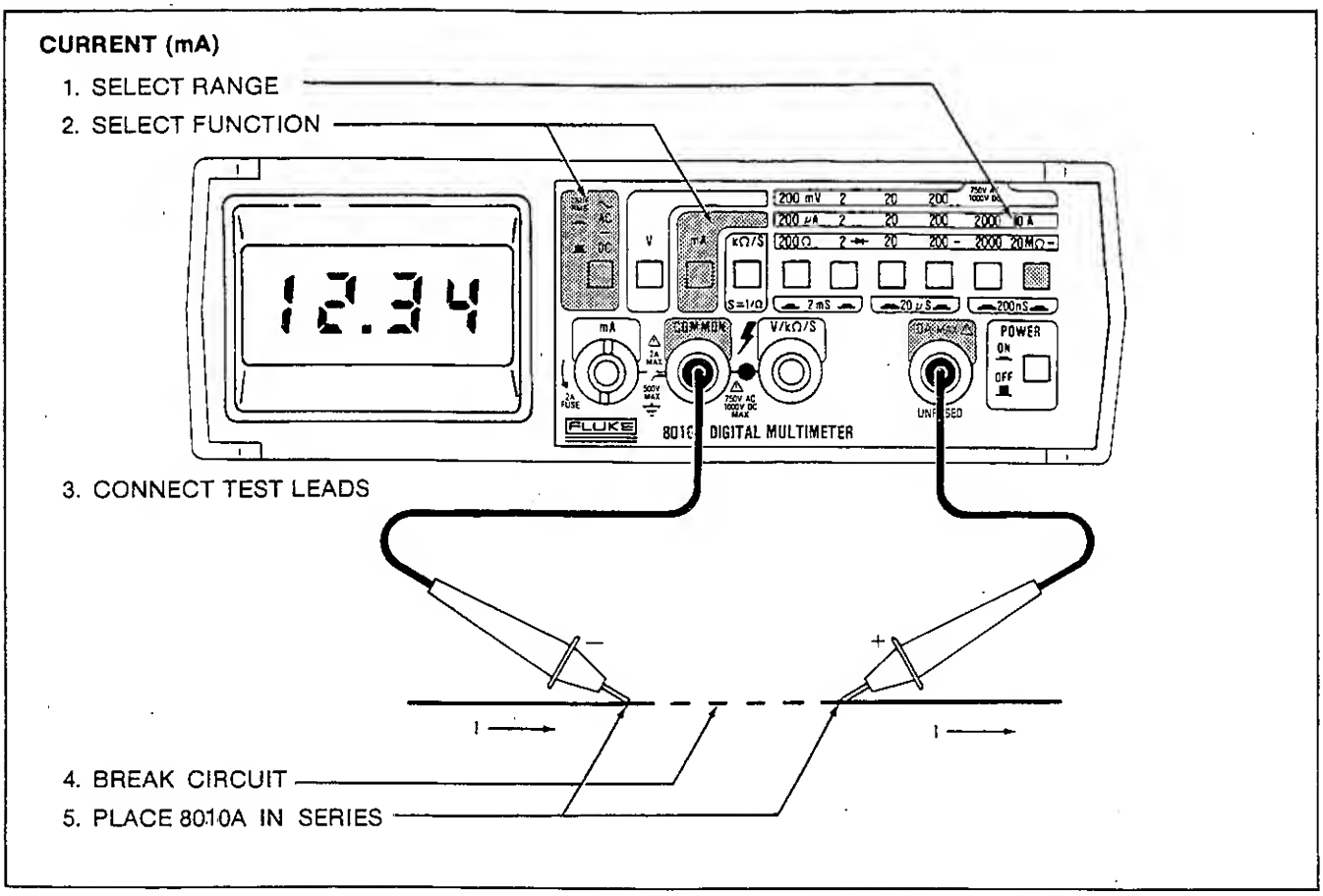

Figure 2-5. AC/DC Current Operation, 10A (8010A only)

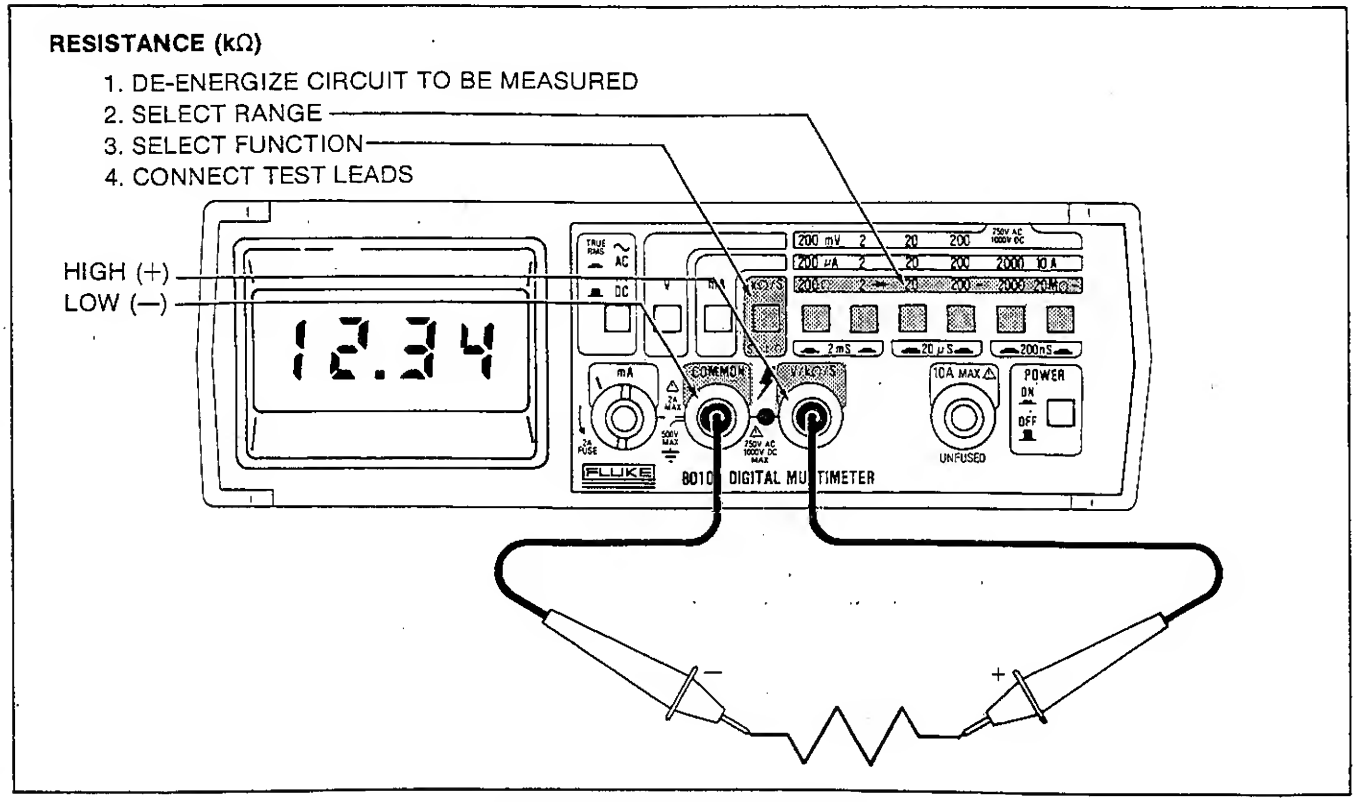

Figure 2-6. Resistance Operation

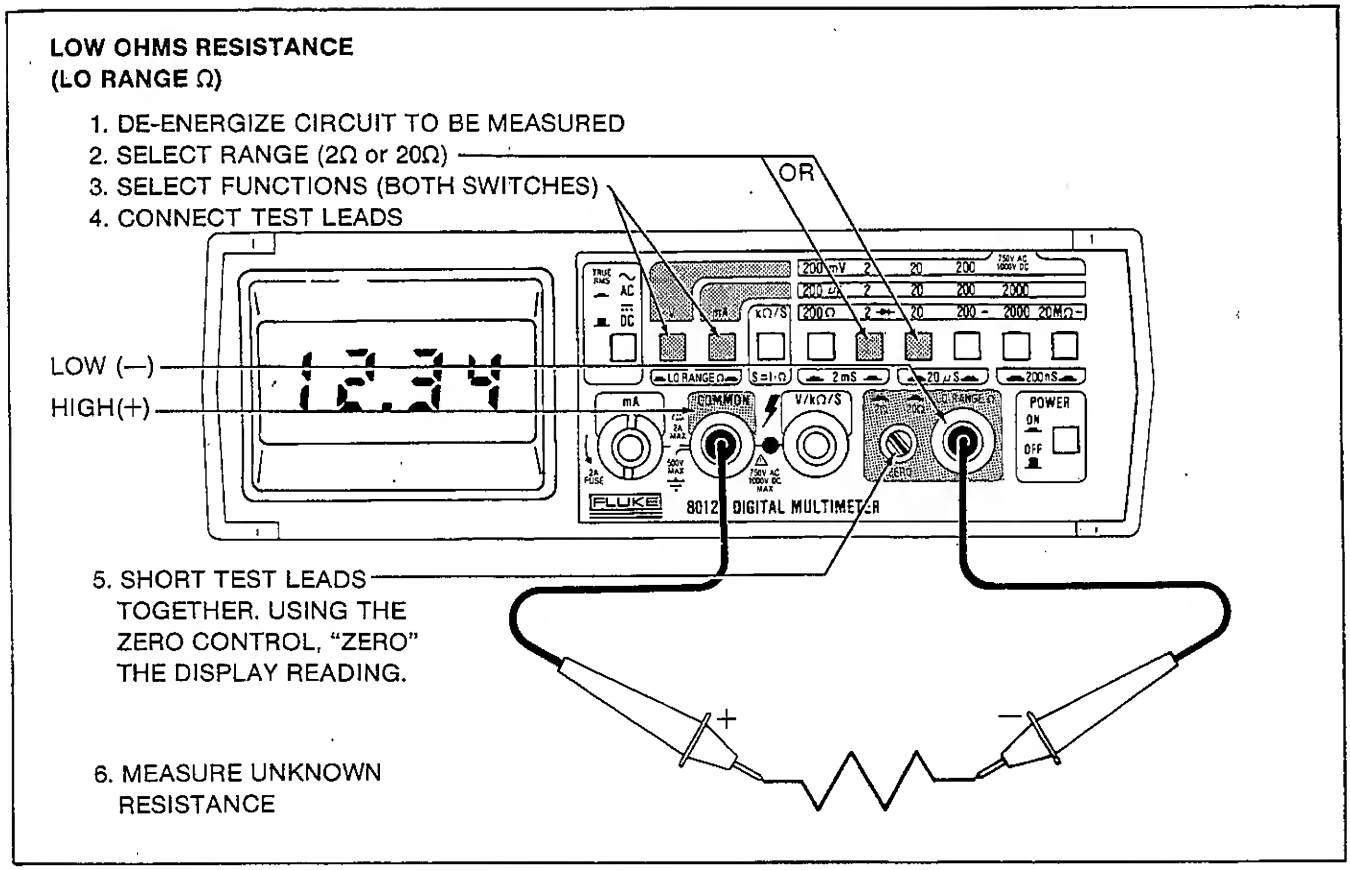

Figure 2-7. Resistance Operation, LO Range Ω (8012A only)

2-32. Conductance (S=1/Ω)

2-33. Figure 2-8 describes how to operate your Multimeter for conductance measurements. When S=1/Ω is selected, three ranges of measurements are available, 2 mS, 20 μS, and 200 nS. To select a range, press both range switches (above the grey-shaded area) simultaneously.

2-34. Diode Test

2-35. Figure 2-9 describes how to operate your Multimeter for diode tests. The three resistance ranges with the diode symbol beside the range value provide a measurement voltage sufficient to cause a silicon junction to conduct. These ranges (2 kΩ, 200 kΩ, and 20 MΩ) can be used to check silicon diodes and transistors. The 2 kΩ resistance range is the preferred diode and transistor testing range and is labeled with the largest diode symbol (→|—). For a silicon diode, the typical forward bias voltage (on the 2 kΩ →|— range) is 0.6V. A reversed bias silicon diode should display the overrange indicator (on the 2 kΩ →|— range).

2-36. INITIAL CHECKOUT PROCEDURE

2-37. The following procedure allows you to verify that the Multimeter is operating correctly for most functions. The only test equipment required is a set of test leads and access to a standard wall socket. This procedure checks for general operation only and is not intended to verify instrument accuracy. Performance tests and calibration adjustments are contained in Section 4 of this manual for the purpose of testing and correcting instrument accuracy.

2-38. Use the following procedure to verify that most of the functions of your Multimeter are operating correctly:

1. Select the AC V function on the Multimeter.
2. Set the Multimeter to the 750V range.

WARNING

THE LOCAL LINE VOLTAGE IS BEING MEASURED IN THE FOLLOWING STEP. DO NOT TOUCH THE PROBE TIPS OR ALLOW THE PROBE TIPS TO COME IN CONTACT WITH EACH OTHER WHILE PREFORMING THE FOLLOWING STEP.

3. Insert the probe tips into a standard wall socket. Note the preceding warning. The display should read the local line voltage.
4. Momentarily set the instrument to the 20V range. The overrange indicator should be displayed.
5. Remove the test leads from the wall socket.

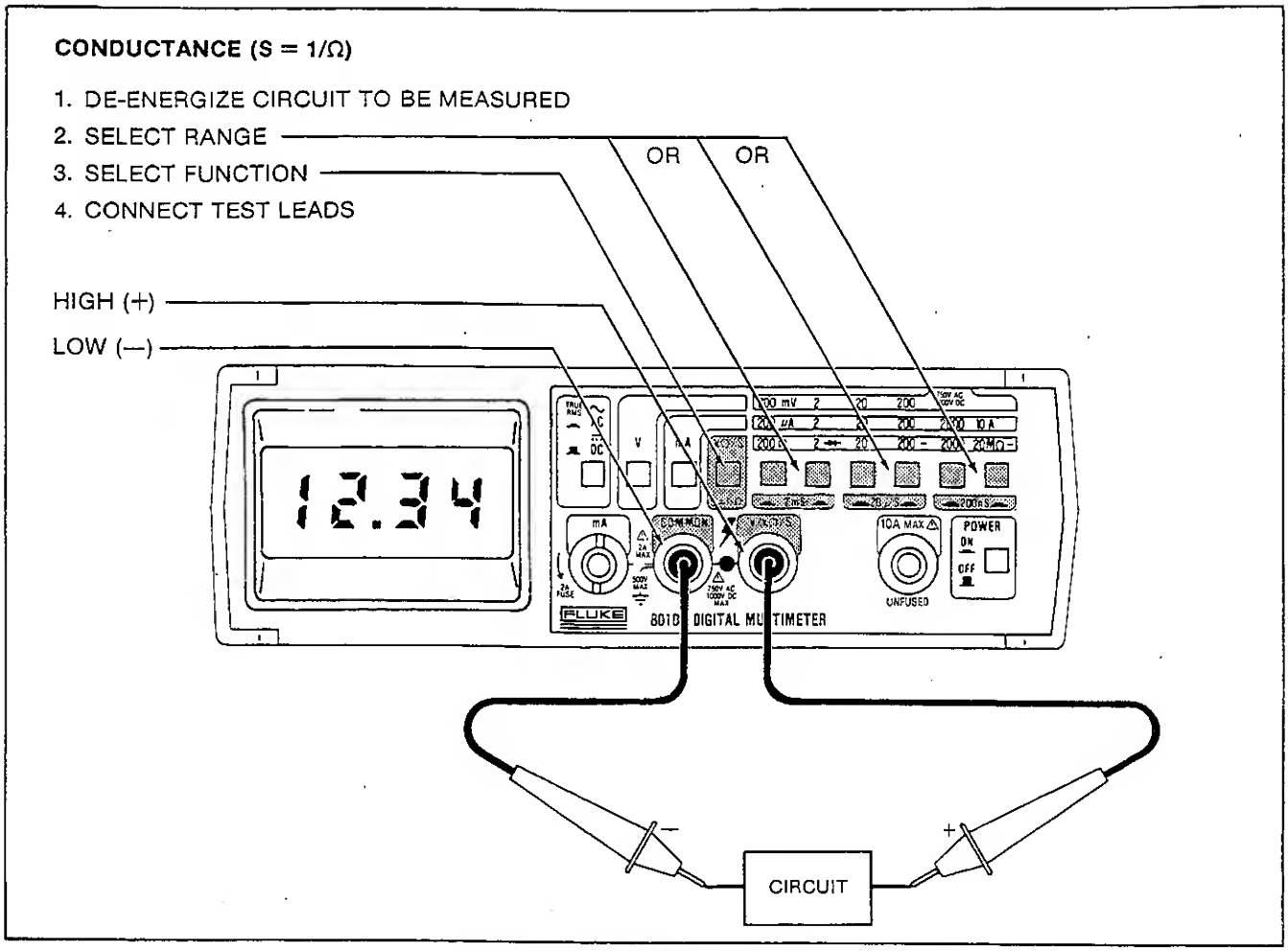

Figure 2-8. Conductance Operation

6. Select the resistance function. The overrange indicator should appear in the display.

7. Set the instrument to the 200Ω range and short the test leads. The display should read "00.0".

8. Select the S=1/Ω (conductance) function, 2 mS range. The display should read ".000" ± 5 counts.

9. Short the test leads. The overrange indicator should appear in the display.

10. This concludes the Initial Checkout procedure for your Multimeter. If the performance of the instrument is in question refer to the Performance tests in Section 4 of this manual.

2-39. APPLICATIONS

2-40. The following paragraphs contain additional information and measurement techniques for the five primary functions of your Multimeter.

WARNING

TO AVOID ELECTRICAL SHOCK AND/OR INSTRUMENT DAMAGE, DO NOT CONNECT THE COMMON INPUT TERMINAL TO ANY SOURCE OF MORE THAN 500 VOLTS DC OR PEAK AC ABOVE EARTH GROUND.

2-41. Circuit Loading Error (Voltage)

2-42. Circuit loading errors occur when voltage measurements are taken on high impedance circuits. This is because the Multimeter loads the source, thus changing the operating voltage of the source. As long as the circuit impedance (source impedance) is low compared to the input impedance of the Multimeter this error may be insignificant. For example, when measuring a circuit with a source impedance of 10 kΩ or less, the error will be ≤0.1 %. If the circuit loading error is significant, use the appropriate formula contained in Figure 2-10 to calculate the percentage of error.

WARNING

OPERATOR INJURY AND INSTRUMENT DAMAGE MAY RESULT IF THE BACKUP FUSE (F2) BLOWS WHEN CURRENT IS BEING MEASURED FROM A VOLTAGE OF GREATER THAN 600 VOLTS.

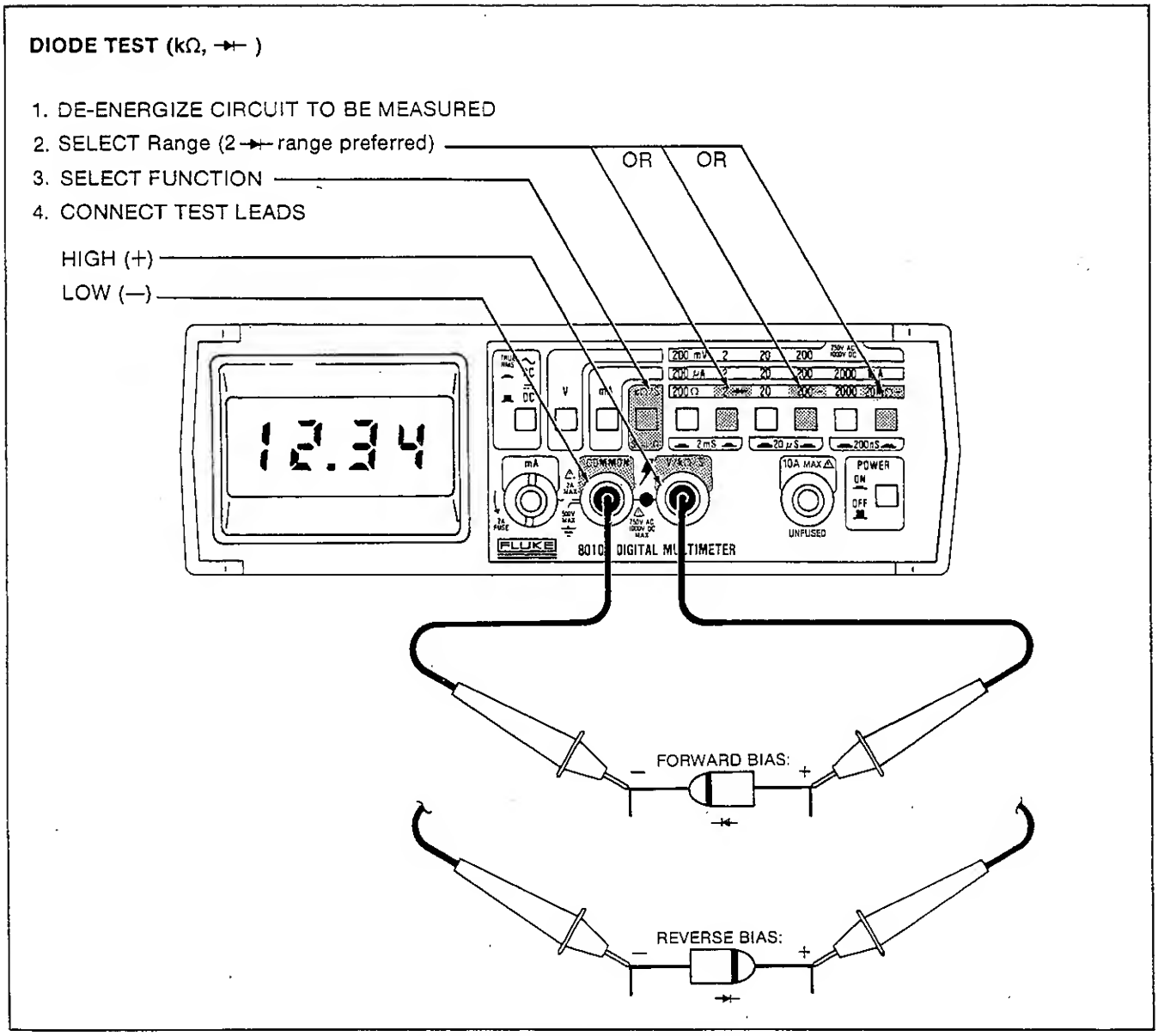

Figure 2-9. Diode Test Operation

2-43. Burden Voltage Error (Current)

2-44. When a multimeter is placed in series with a circuit to measure current, the voltage drop of the multimeter induces an error. This voltage is called the burden voltage. The maximum full-scale burden voltages for your Multimeter are 0.3V for the four lowest ranges and 0.9V for the highest range.

2-45. These voltage drops can affect the accuracy of the current measurement if the current source is unregulated and the resistance of the shunt and fuses of the multimeter exceeds 1/1000 of the source resistance. If the multimeter burden voltage is significant, the formula in Figure 2-11 can be used to calculate the burden voltage error.

2-46. Test Lead Compensation (Resistance)

2-47. When measuring low resistances, the effects of test lead resistance may add a significant error. This error is compensated for by measuring the lead resistance and subtracting it from the resistance measured in the circuit. The test lead resistance of the 8010A must be subtracted manually, by the operator, to compensate for this error. The 8012A provides a ZERO function, for Low Ohms resistance measurements, that "zeros out" the value of the test lead resistance. Figure 2-7 and the paragraphs on Low Ohms Resistance describe how to use the ZERO function of the 8012A.

2-48. Use the following procedure to manually compensate for test lead resistance:

1. Setup the Multimeter as shown in Figure 2-6.

2. Short the test leads together (press the test leads together firmly).

3. Record the Multimeter reading obtained in Step 2.

4. Proceed with the resistance measurement and subtract the value of Step 3 from the Multimeter reading.

1. DC VOLTAGE MEASUREMENTS

Loading Error in % = 100 x Rs ÷ (Rs + 10^7)
Where: Rs = Source resistance in ohms of circuit being measured.

2. AC VOLTAGE MEASUREMENTS
First, determine input impedance, as follows:*

$$Zin = \frac{10^7}{\sqrt{1 + (2\pi F \cdot Rin \cdot Cin)^2}}$$

Where: Zin = effective input impedance
Rin = 10^7 ohms
Cin = 100 x 10^{-12} Farads
F = frequency in Hz

Then, determine source loading error as follows:*

$$\text{Loading Error in \%} = 100 \times \frac{Zs}{Zs + Zin}$$

Where: Zs = source impedance
Zin = input impedance (calculated)

*Vector algebra required

Figure 2-10. Circuit Loading Error

2-49. High Resistance Measurements (Conductance)

2-50. The conductance function of your Multimeter can be used to measure high resistive (low leakage) components (diodes and capacitors) while minimizing noise problems. The three conductance ranges (2 mS, 20 μS, and 200 nS) can be used for making resistance measurements from 500Ω to 1 MΩ, 50 kΩ to 100 MΩ, and 5 MΩ to 10,000 MΩ. Refer to Figure 2-12 for a list of conductance to resistance conversions.

2-51. Leakage Resistance Measurements (Conductance)

2-52. Use the conductance function for leakage testing on purely resistive components (e.g., cables and pcb's).

NOTE

Under high humidity conditions, fingerprints and other residual surface contaminants can create their own leakage paths. Clean all surfaces and use clean test leads to minimize the effect of leakage paths.

2-53. Diode Leakage Tests (Conductance)

2-54. Diode leakage (I_R) tests require that the diode junction be reverse biased while being measured. Connect the anode of the diode to the COMMON input connector to reverse bias a diode junction. A good silicon diode will produce an in-scale display reading on the 200 nS range when reverse biased.

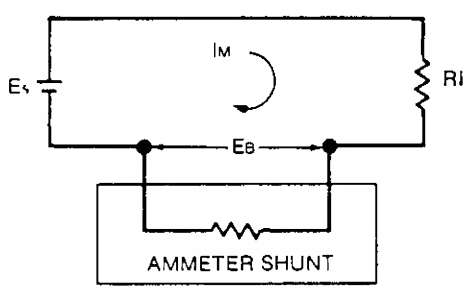

Es = Source voltage
Rl = Load resistance + Source resistance
Im = Measured current (display reading in amps)
Eb = Burden voltage (calculated)
Eb = meas. current [(200/current range in mA) +.35]

ERROR:

Error in % = 100 x Eb/(Es - Eb)
Error in A = (Eb x Im)/(Es - Eb)

EXAMPLE:

Es = 15V
Rl = 100 kΩ
Im = 148.51 μA (.14851 mA)

Eb = 148.51 x 10^{-6} x [(200/.2) + .35]

= 148.51 x 10^{-6} x 1000.35 = 148.56 mV

Max. error in % = 100 x [148.56 mV/(15V - .14856V)] = 1.0003%

Add this to the range spec. accuracy:

Max. error in % = 1.0003% ±(.2% + 2 digits)

Max. error in A = (148.56 mV x 148.51 μA)/(15000 mV - 148.56 mV)

= 1.486 μA

Add 1.486 μA to the reading for correct current

Figure 2-11. Calculating Burden Voltage Error

Interpolation Table (I/no.)

DIGIT	0	1	2	3	4	5	6	7	8	9
1	1	.909	.833	.769	.714	.667	.625	.588	.556	.526
2	.500	.476	.455	.435	.417	.400	.385	.370	.375	.345
3	.333	.323	.313	.303	.294	.286	.278	.270	.263	.256
4	.250	.244	.238	.233	.227	.222	.217	.213	.208	.204
5	.200	.196	.192	.187	.185	.182	.179	.175	.172	.169
6	.167	.164	.161	.159	.156	.154	.152	.149	.147	.145
7	.143	.141	.139	.137	.135	.133	.132	.130	.128	.127
8	.125	.123	.122	.121	.119	.118	.116	.115	.114	.112
9	.111	.110	.109	.108	.106	.105	.104	.103	.102	.101

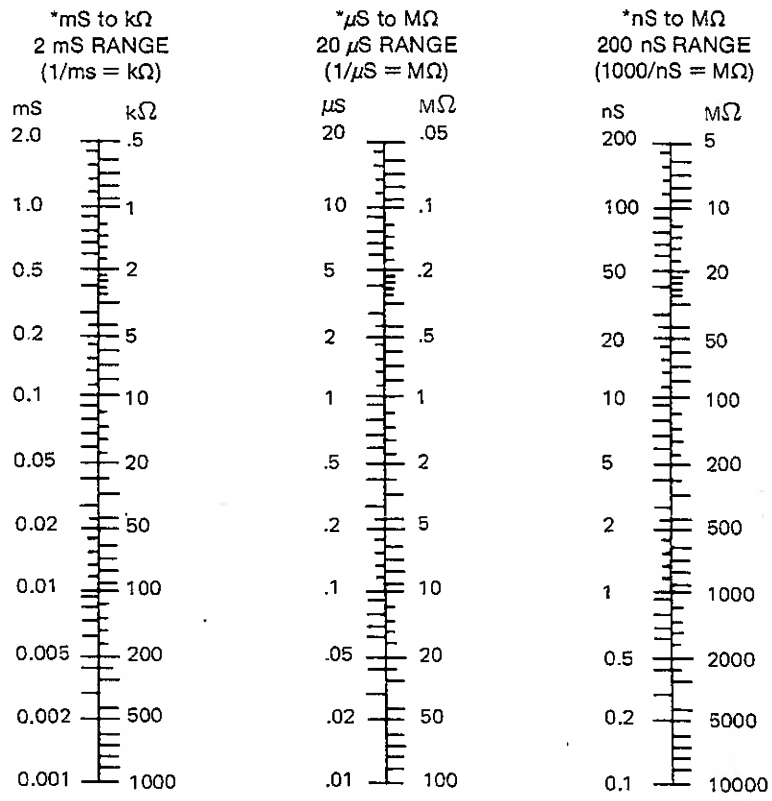

CONVERSION SCALES

*S = siemens = 1/Ω = International Unit of Conductance
Formerly Known as the mho.

Use the following procedure to convert a conductance reading (displayed in siemens) to equivalent resistance (in ohms):

1. On the Interpolation Table locate the most significant digit of the conductance display under the DIGIT column heading.
2. On the Interpolation Table locate the second most significant digit of the conductance display across from the DIGIT row.
3. On the Interpolation Table locate the value (of resistance) at the intersection of the two digits in Steps 1 and 2, then use the appropriate Conversion Scale to determine the position of the decimal point.

For Example:

A reading of 52.0 nS is displayed on the Multimeter. The Interpolation Table shows a value of .192. Using the Conversion Scale, under the 200 nS Range heading, 52.0 nS corresponds to approximately 20 MΩ. Therefore, the actual equivalent resistance is 19.2 MΩ

Figure 2-12. Conductance to Resistance Conversion

2-55. Transistor Tester

2-56. The transistor tester described in the following paragraphs provides approximate test information. Beta is tested using a V_{CE} of 2V and an I_C of about 200 μA. This transistor tester is useful for checking the proper operation of transistors and approximate beta values for comparative measurements.

2-57. The transistor tester fixture is described in Figure 2-13. When assembled and connected to the V/kΩ/S and the COMMON input connector, the Multimeter can be used to determine the following information about transistors:

- Transistor type (NPN or PNP)
- Defective transistors (shorted or open)
- Collector-to-emitter leakage (I_{CES})
- Beta from 10 to 1000 in a single range.

2-58. Transistor type is determined by setting the switch on the test fixture to BETA, setting the Multimeter to the 2 mS range, and observing the display reading. If a low reading (< 0.010) is displayed, reverse the test fixture at the input connectors. If the collector of the transistor is now connected to the COMMON input connector the transistor is a PNP type. An NPN type will have its collector connected to the V/kΩ/S input connector.

2-59. DEFECTIVE TRANSISTORS

2-60. If the transistor is defective, the following indications will appear, regardless of transistor type or test position:

1. An open transistor will produce a display reading of 0.001 or less.
2. A shorted transistor will produce an overrange indication on the display.

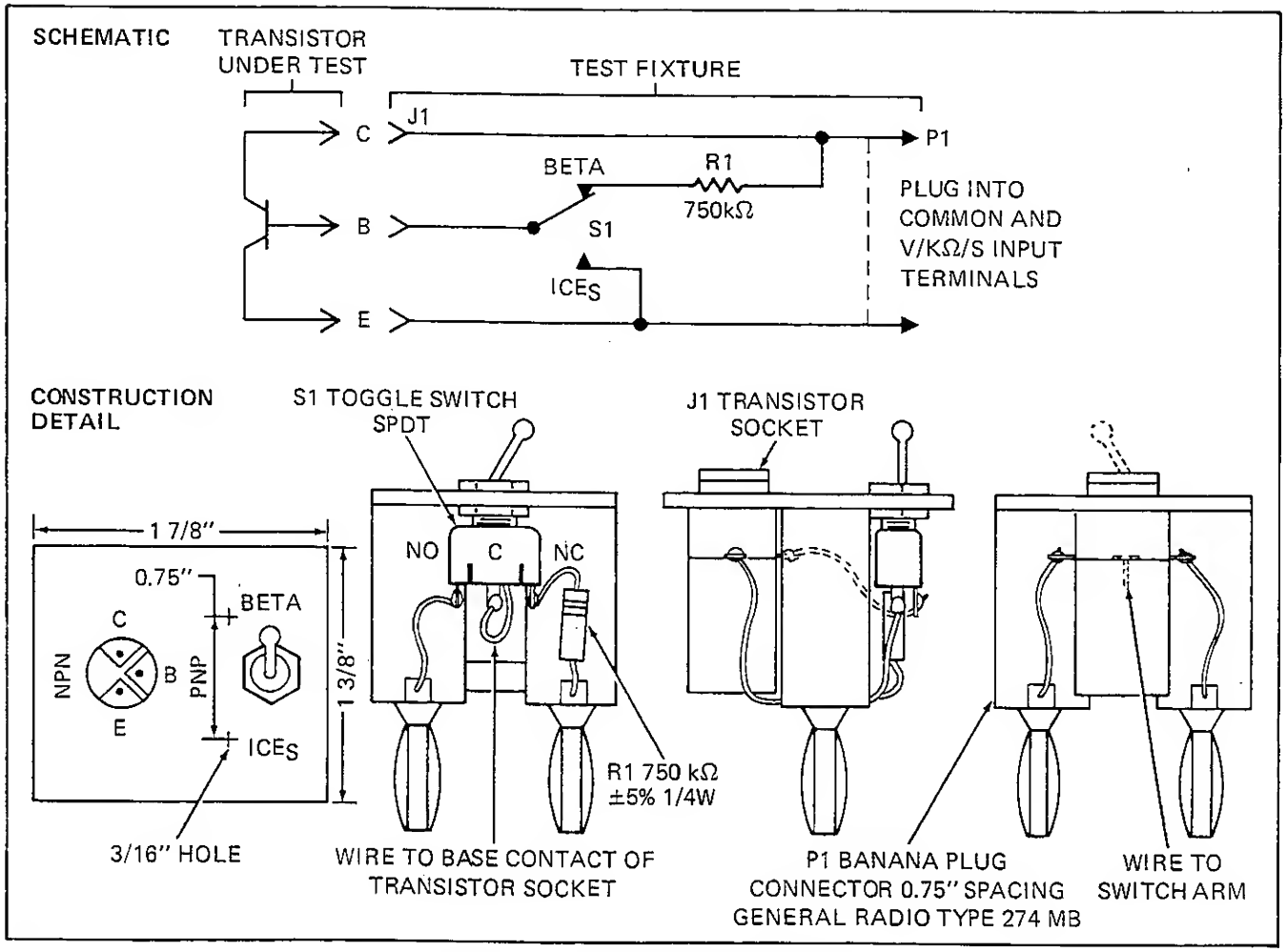

Figure 2-13. Transistor Beta Test Fixture

2-61. TRANSISTOR LEAKAGE TEST

2-62. Use the following procedure to test transistors for leakage (ICES):

1. Install the transistor, and connect the test fixture to the Multimeter (see preceding paragraphs).
2. Set the switch on the test fixture to ICES.
3. Select the conductance function, 2 mS range on the Multimeter.
4. A reading of more than 0.0020 (6 μA) indicates a faulty transistor (silicon).

2-63. TRANSISTOR BETA TEST

2-64. Use the following procedure to test the beta of a transistor:

1. Install the transistor and connect the test fixture to the Multimeter (see preceding paragraphs).
2. Set the switch in the test fixture to BETA.
3. Select the conductance function, 2 mS range on the Multimeter.
4. Note the display reading on the Multimeter, then shift the decimal point three places to the right. This will be the beta of the transistor.

NOTE

Beta is a temperature-sensitive measurement. Allow sufficient time for each tested transistor to stabilize. Avoid touching the transistor case with your fingers while making beta measurements.

2-65. True-RMS Measurements

2-66. One of the most useful features of the Multimeters is the direct measurement of true-rms ac voltages and ac current. Mathematically, rms is defined as the square root of the mean of the squares of the instantaneous voltages. In physical terms, rms is equivalent to the dc value that dissipates the same amount of heat in a resistor as the original waveform. True-rms is the effective value of any waveform and represents the energy level of the signal. It is used directly in the relationships of Ohm's Law and provides a reliable basis for comparisons of dissimilar waveforms.

2-67. Most multimeters in use today have average-responding ac converters rather than true-rms converters like the 8010A and 8012A. Usually the gain in average-responding meters is adjusted so that the reading gives the rms value, provided the input signal is a harmonic-free sinusoid. However, if the signal is not sinusoidal, the average-responding meter does not give a correct rms reading.

2-68. Your Multimeter's ac converter calculates the rms value through analog computation. This results in accurate rms values for mixed frequencies, modulated signals, square waves, sawtooths, 10%-duty-cycle pulses, etc, when these signals are measured with your Multimeter.

2-69. Waveform Comparison (RMS vs Averaging Meters)

2-70. Figure 2-14 shows the relationship between common waveforms and their displayed value, as they appear on the 8010A or 8012A, compared to average-responding meters. Figure 2-14 also illustrates the relationship between ac and dc measurements for ac-coupled meters. For example, the first waveform (in Figure 2-14) is a sine wave with a peak voltage of 1.414V. Both Fluke Multimeters (8010A and 8012A) and the average responding meters display the correct rms reading of 1.000V (the dc component equals 0). The 1.414V (peak) rectified square wave also produces a correct dc reading (0.707V) on all the multimeters, but only the Fluke Multimeters correctly measure the ac component (0.707V). The average responding meter measures the ac component of the rectified square wave as 0.785V, which is an error of 5.6%.

2-71. Waveform Crest Factors

2-72. The crest factor of a waveform is the ratio of the peak to rms voltage. In waveforms where the positive and negative half-cycles have different peak voltages, the higher voltage is used in computing the crest factor. Crest factors start at 1.0 for a square wave (peak voltage equals rms voltage).

2-73. Your Multimeter can measure signals with a crest factor of 3.0 or less, at full scale. Figure 2-15 illustrates some typical signals and their crest factors. The waveforms in Figure 2-15 show that a signal with a crest factor of greater than 3.0 is not common.

2-74. To ensure that a signal measured with your Multimeter has a crest factor below 3.0, measure the peak value with an ac coupled oscilloscope. If the peak value is not more than three times the true-rms reading of your Multimeter, then the crest factor of the signal is 3.0 or less. Another method of verifying the error caused by the crest factor of a signal is to compare the reading of your Multimeter with a reading on the next higher range of your Multimeter. The crest factor capability of your Multimeter increases (from 3.0) for readings less than full-scale. The crest factor capability of your Multimeter is shown by the following equation:

$$\text{Crest Factor Capability} = 3\sqrt{\left(\frac{\text{Range}}{\text{Input}}\right)}$$

The error caused by exceeding the crest factor of 3.0 at full scale, will be reduced significantly on the next higher measurement range of your Multimeter. The crest factor capability at 1/10 scale approaches 10.

AC-COUPLED INPUT WAVEFORM	PEAK VOLTAGES		DISPLAY READINGS			DC AND AC TOTAL RMS
			AC COMPONENT ONLY		DC COMPONENT ONLY	TRUE–RMS= $\sqrt{ac^2 + dc^2}$
	PEAK to PEAK	PEAK	RMS CAL*	8050A		
SINE 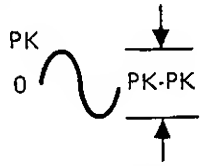	2.828	1.414	1.000	1.000	0.000	1.000
RECTIFIED SINE (FULL WAVE) 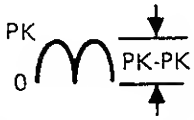	1.414	1.414	0.421	0.436	0.900	1.000
RECTIFIED SINE (HALF WAVE) 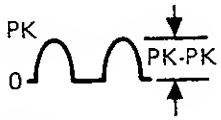	2.000	2.000	0.779	0.771	0.636	1.000
SQUARE	2.000	1.000	1.111	1.000	0.000	1.000
RECTIFIED SQUARE 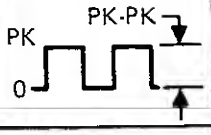	1.414	1.414	0.785	0.707	0.707	1.000
RECTANGULAR PULSE 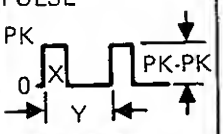 $D = X/Y$ $K = \sqrt{D - D^2}$	2.000	2.000	$4.442K^2$	2K	2D	$2\sqrt{D}$
TRIANGLE SAWTOOTH 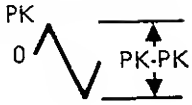	3.464	1.732	0.962	1.000	0.000	1.000

* RMS CAL IS THE DISPLAYED VALUE FOR AVERAGE RESPONDING METERS THAT ARE CALIBRATED TO DISPLAY RMS FOR SINE WAVES

Figure 2-14. Waveform Comparisons

2-75. Combined AC and DC Signal Measurements

2-76. It is sometimes necessary to measure an ac signal riding on a dc level. An example of this type of signal is shown in Figure 2-16. To obtain an accurate measurement of the total rms value for these signals, perform the following steps:

1. Measure the ac component of the signal using the AC V function.
2. Measure the dc component of the signal using the DC V function.
3. Use the following formula, with the values obtained in Steps 1 and 2, to determine the total rms value of the signal:

$$\text{Total RMS Value} = \sqrt{(\text{ac component rms})^2 + (\text{dc component})^2}$$

2-77. Affects of Offset in AC Measurements

2-78. Your Multimeter is a true-rms-responding multimeter, and the display may indicate a reading of 1 to 2 digits (because of amplifier noise) when the input is shorted in the AC V or AC mA functions. The accuracy of your Multimeter is not affected by this internal offset even when measured inputs are at the specified floor of the multimeter (5% of the range selected). When the rms value of the two signals (internal offset and 5% of range input) is calculated, as in the following equation, the insignificant effect of the offset is shown:

$$\text{Total rms digits} = \sqrt{2^2 + 100^2} = 100.02$$

The display of your Multimeter will read 100 digits.

2-79. Bandwidth Limitations in AC Voltage Measurements

2-80. Signals with rectangular waveforms contain component frequencies that are much higher than the fundamental frequency used to describe them. The component frequencies, for rise times less than 1 microsecond, exceed the 200 kHz bandwidth of your Multimeter (and will produce a low reading display). For example, a 10-kHz square wave with a rise time of less than 1 microsecond will produce a display reading that is approximately 1% low. This error will be proportionally higher for higher frequency square waves.

WAVEFORM	CREST FACTOR
SQUARE WAVE	1.0
SINE WAVE	1.414
TRIANGLE SAWTOOTH	1.732
MIXED FREQUENCIES	1.414 to 2.0
SCR OUTPUT OF 100% – 10%	1.414 to 3.0
WHITE NOISE	3.0 to 4.0
AC COUPLED PULSE TRAIN (a, b)	$3.0\sqrt{b/a - 1}$
SPIKE	>9.0

Figure 2-15. Crest Factor

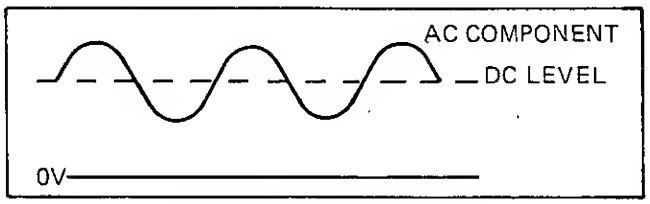

Figure 2-16. Total RMS Value

Section 3
Theory Of Operation

3-1. INTRODUCTION

3-2. The theory of operation of your Multimeter is discussed on two levels. First, the Functional Description describes the operation of your instrument in terms of the functional relationships of the major circuits. Second, the Circuit Description presents a more detailed discussion of the major circuits. Both levels are illustrated by block diagrams and simplified schematics in this section and the schematic diagrams in Section 7. Section 6 contains the theory of operation of the Rechargeable Battery Option.

3-3. FUNCTIONAL DESCRIPTION

3-4. The major circuits of your Multimeter are illustrated in the functional block diagram in Figure 3-1. The functional block diagram shows that the multimeter can be divided into two general circuits, the Input Signal Conditioners and the Digital Voltmeter. The Signal Conditioners are responsible for converting current, resistance, conductance, and ac or dc voltage to an analogue dc voltage (proportional to the input) from -200 mV to 200 mV or -2V to 2V for the digital voltmeter. The signal conditioner circuits also provide protection from transients and overrange conditions. The Digital Voltmeter is composed of a custom IC (U3) and the LCD Display. The custom IC contains an analog to digital converter (a/d), a controller, and the LCD drivers.

3-5. These two circuit groups work together as follows: An input signal (of unknown value) is applied to its respective signal conditioning block by the selection of the mA, V, or kΩ (S=1/Ω) front panel function switches. (For this discussion, the 10A function switch for the 8010A and the LO RANGE Ω function switch for the 8012A will be presented as extensions of the current and resistance signal conditioners.) The output voltage of the signal conditioners is a proportional analogue of the input signal. This output voltage will be from -200 mV to 200 mV or -2V to 2V, depending on the selected range. The dc output of the conditioners is sent directly to the A/D Converter. The ac output of the conditioners is converted to dc by a true-rms converter before reaching the A/D Converter. Once the analog voltages have been conditioned, the A/D Converter converts the unknown voltage (which represents the signal measured with the Multimeter) into representative, digital information. This digital information is then used by the LCD drivers to present the reading on the LCD. The position of the decimal point is determined by the Range Switch settings.

3-6. CIRCUIT DESCRIPTIONS

3-7. The following paragraphs describe each of the major circuits in detail.

3-8. Digital Voltmeter

3-9. The Digital Voltmeter of your Multimeter consists of the custom IC (U3) and the 3-1/2 digit LCD. The custom IC contains an a/d converter, a digital controller, and the display logic and drivers for the LCD. The proper function of U3 depends on external components to establish the basic timing and analog levels. Basic timing is provided by a quartz crystal (Y1). Resistors, capacitors, and an external voltage reference provide the analog levels for the A/D Converter.

3-10. The Digital Voltmeter has two ranges of measurement. If you select either the 200 mV or 20V ranges (or their equivalent ranges in other functions) the Digital Voltmeter can read voltages from -200 mV to 200 mV. Selection of any other range will enable the Digital Voltmeter to read -2V to 2V.

3-11. A/D CONVERTER

3-12. The A/D Converter uses the dual slope integration method. Dual slope integration takes advantage of the natural laws governing the charge and discharge of capacitors. In dual slope integration, the unknown voltage is used to charge a capacitor for a specific length of time. Then a known voltage of the

opposite polarity is used to discharge the capacitor. The time it takes for the capacitor to discharge is measured. The discharge time is proportional to the level of the unknown input voltage. This method is extremely accurate, fast, and noise-free.

3-13. In the following description of dual slope integration, assume that your instrument has a line power frequency of 60 Hz and a range has been selected which causes the ±2V measurement range of the Digital Voltmeter to be activated. Figure 3-2 contains a simplified schematic of the A/D Converter and a timing diagram. The circled switches (in the simplified schematic) represent FET switches operated by the digital controller. These FET switches, and the three operational amplifiers, are located inside U3. All other components are external to U3. The timing diagram shows the operation of the FET switches for one conversion cycle with unknown voltage inputs at 1/2 range, full range, and overrange. The conversion cycle repeats continuously.

3-14. The basic clock frequency is produced by dividing the 3.84 MHz output from the quartz crystal by 64, to produce a clock frequency of 60 kHz. The Timing diagram shown in Figure 3-2 is based on the number of clock cycles counted and uses them as timing indicators. The conversion cycle is 20,000 cycles long (or 1/3 of a second for the 60 Hz versions).

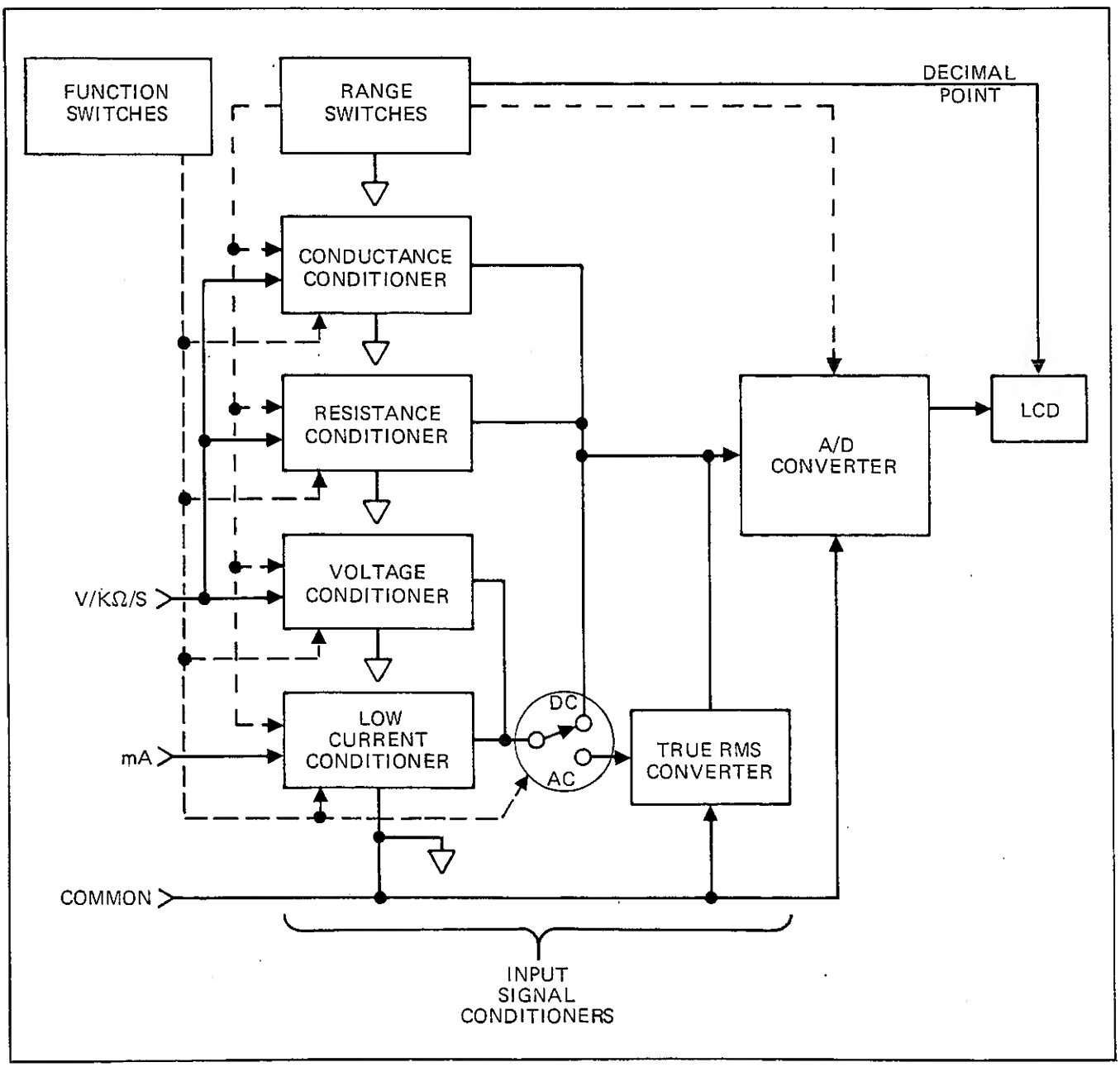

Figure 3-1. Basic Block Diagram

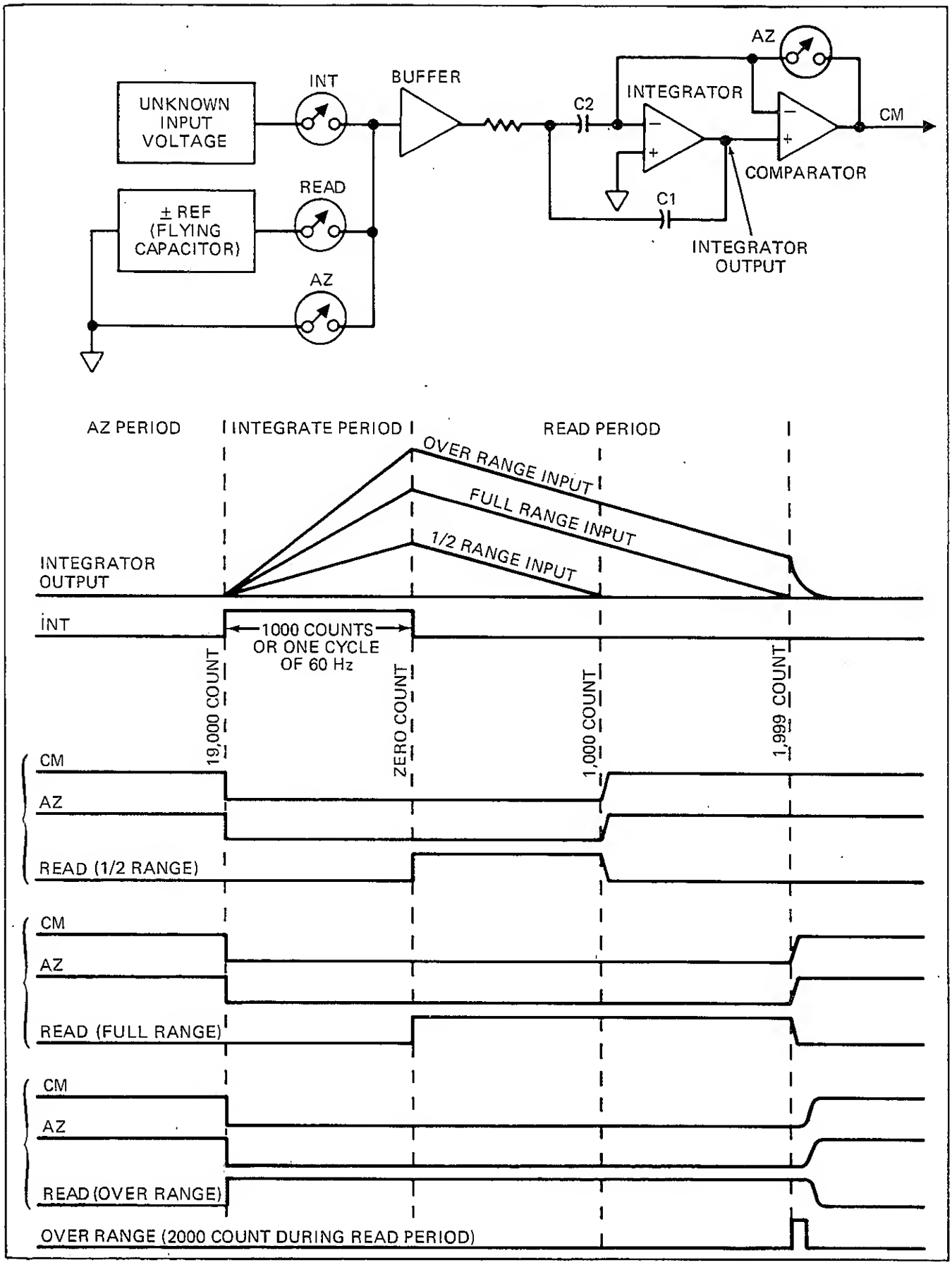

Figure 3-2. A/D Converter Simplified Schematic and Timing Diagram

3-15. Assume that the A/D Converter is just before its integrate (INT) period, and an unknown voltage equal to 1/2 range is applied to the A/D Converter. The auto-zero (AZ) period is just ending so the A/D Converter should be ready to receive a new input. The controller opens the AZ FETs and closes the INT FET applying the unknown voltage to the integrator. The integrator output changes, changing the comparator output (CM) to switch to a supply voltage. The integrate period lasts for a count of 1000. At the end of this time, the controller will open the INT FET and close the READ FET. At this time, C1 has charged to a level proportional to the level of the unknown input voltage.

3-16. Closing the READ FET applies the known reference voltage to the input of the integrator. The polarity of this reference voltage is selected by the digital controller to be opposite the polarity of the unknown input voltage. Capacitor C1 starts to discharge at a known rate. The digital controller starts to count clock pulses at the beginning of the read period. When C1 discharges to the level it was when the integrate period started, the comparator swithces CM to the other polarity supply. This change in the level of CM causes the controller to stop counting clock pulses, open the READ FET, and close the AZ FET. The controller now contains a digital count that is proportional to the level of the unknown input voltage. During the read period, the controller can count from 0 to 1999. Since we used an unknown input voltage equal to 1/2 range, the digital count will be 1000. The controller drives the display logic so that 1000 is displayed on the LCD. The location of the decimal point is determined by the position of the range switches. The LCD displays the unknown signal with the proper units.

3-17. When the unknown input voltage equals full range, the read period is extended. When CM changes polarity, the digital controller has counted 1999 clock pulses. This is the maximum reading for any range.

3-18. If the unknown input voltage is greater than full range (overrange), everything is normal until the digital controller counts 1999 clock pulses. At this time, C1 is still not discharged (i.e., the output of the comparator has not changed polarity). The digital controller then counts one more clock pulse creating a 2000 count. A count of 2000 generates an overrange pulse and the overrange indicator appears on the LCD. The overrange pulse will also cause the digital controller to restart the auto-zero period.

3-19. During the auto-zero period, a ground reference is applied to the input of the A/D Converter. Under ideal conditions, the output of the A/D Converter would be zero. However, input-offset-voltage errors accumulate in the amplifier loop and appear at the comparator output as an error voltage. This error voltage is charged on C2 where it is stored for the rest of the conversion cycle. The stored level is used to provide offset voltage correction during the integrate and read periods. The auto-zero period starts at the end of READ and ends at the beginning of INT. The length of AZ can vary from a minimum of 17,000 counts (overrange) to a maximum of about 19,000 counts (zero input).

3-20. The INT period is 1000 counts. With a clock frequency of 60 kHz, the INT period is exactly 1 cycle of a 60 Hz period. All inputs to the A/D Converter are integrated. So, the positive half cycle of the 60 Hz noise cancels out the negative half cycle of the 60 Hz noise. As stated before, this method is highly accurate, fast, and noise-free.

3-21. If your instrument is a 60 Hz version and you select one of the ranges that enables the ±200 mV measurement function of the internal voltmeter, the A/D Converter functions the same with two exceptions to the timing of the conversion cycle. With the ±200 mV function, the INT period is 10,000 counts long. Auto-zero is correspondingly shorter. At a clock frequency of 60 kHz, the 10,000 count length of the INT period means that it is 10 cycles of a 60 Hz period. Noise is canceled.

3-22. Instruments configured for 50 Hz operation function the same has the 60 Hz versions with the exception of a different frequency quartz crystal being used as the clock reference. The resulting basic clock frequency is 50 kHz. This means that 50 Hz noise is canceled by the dual slope integration of the A/D Converter.

3-23. DIGITAL CONTROLLER

3-24. The Digital Controller is an integral part of the custom IC. It uses the reference frequency from the crystal as the basic clock. It controls the A/D Converter and LCD Driver. It also monitors the input for an overrange condition, and turns on the overrange indication when necessary.

3-25. THE DISPLAY (LCD)

3-26. The LCD is located in a mounting bracket fastened to the Main PCB Assembly. Its drivers are contained inside the custom IC. Overrange indications and numerical values originate from the custom IC. The decimal point is controlled separately by the range switches and a CMOS IC.

3-27. Input Signal Conditioners

3-28. The A/D Converter in your instrument has an input voltage limit from –2V dc to 2V dc. Any other input will result in an overrange condition. If you are measuring a dc voltage that falls within this range, the signal conditioners are not used and the voltage is applied directly to the A/D Converter. The input signal conditioners are used when measuring: higher dc voltages (outside of ±2V), ac voltages, current (ac/dc), resistance, and conductance.

3-29. TRUE RMS CONVERTER

3-30. The True RMS Converter in your Multimeter is a custom hybrid circuit that converts the ac voltage (from either the voltage or current conditioners) into a dc voltage equal to the true rms value of the ac signal. This converter is designed to handle ac signals from 40 Hz to 50 kHz.

3-31. VOLTAGE CONDITIONER

3-32. The Voltage Conditioner is a simple, wide bandpass circuit. Figure 3-3 (part A) shows a simplified schematic of the Input Signal Conditioner for voltage measurements. When either the 200 mV or the 2V range is selected, the input signal passes through the top range switch, bypassing the voltage divider completely. (The appropriate measurement function of U3 is enabled by the range switches too.) When either the 20V or 200V range is selected, the top range switch is in the down position and the bottom range switch is in the position shown in Figure 3-3. The portion of the input signal between R1 and R2 is sent to the A/D Converter or the True RMS Converter. The voltage divider ratio is 1:100. Signals on the 20V range can now be measured by the 200 mV function of U3. When the 1000V dc (or 750V ac) range is selected, both range switches (Figure 3-3, part A) are in the down position. This places R3 in parallel with R2. The voltage divider ratio is now 1:1000, and the input voltages are measured by the 2V function of U3.

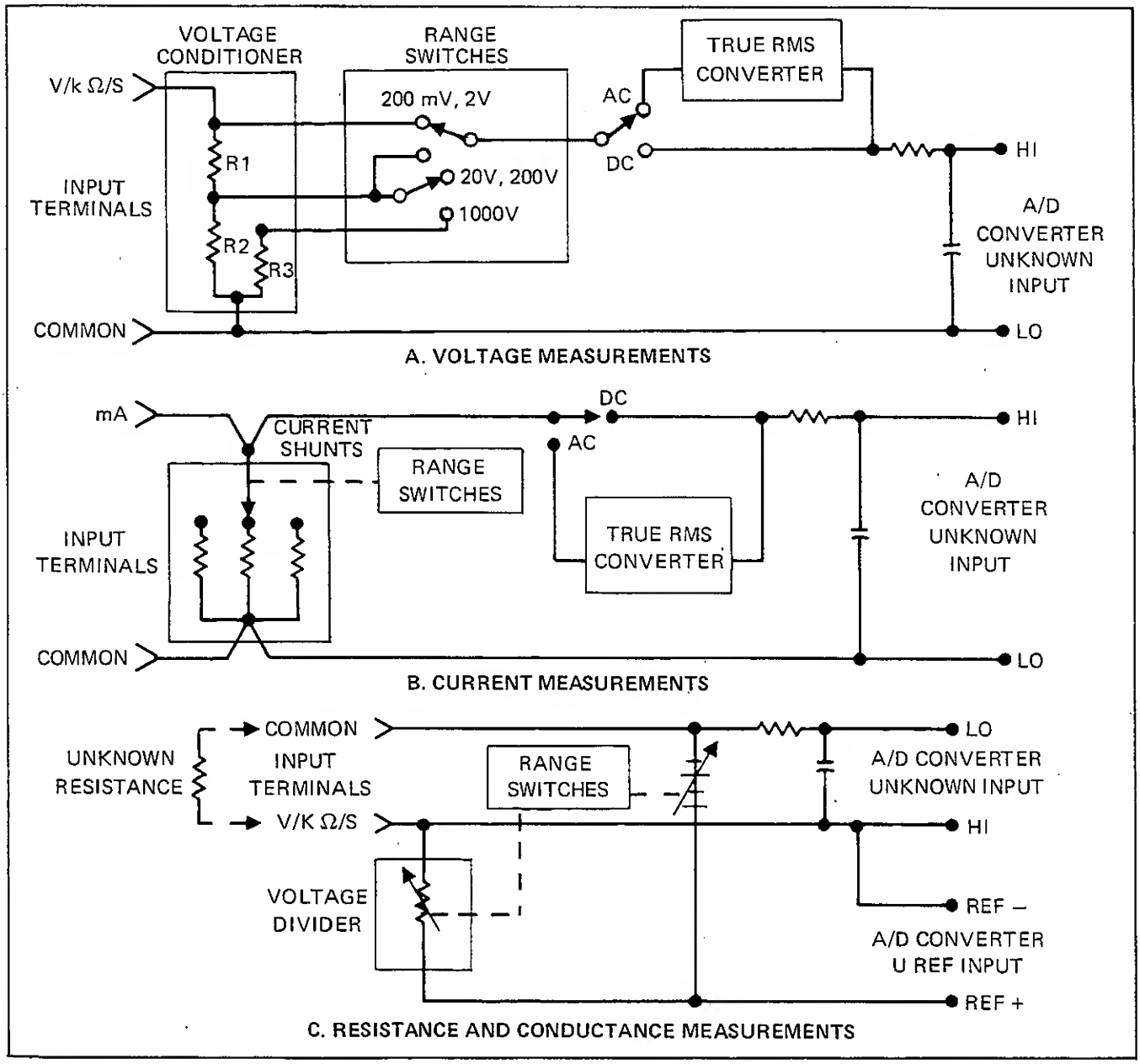

Figure 3-3. Input Signal Conditioners

3-33. CURRENT CONDITIONER

3-34. The Current Conditioner changes current inputs into representative voltages. This is done by passing the unknown current through a precision resistor and using the voltage developed across the resistor. If the proper resistance (i.e., range) is selected, the voltage across the resistor (after passing through the True RMS Converter) will be within the range of the A/D Converter. These resistors are a special type of high power precision resistors known as current shunts. (They route or shunt the current around the meter.) Figure 3-3 (part B) shows a simplified schematic of the current input signal conditioner for current measurements. The range switches determine the combination of current shunts used the measurements. The resistances of the five current shunts are precisely 1000Ω, 100Ω, 1.00Ω, and 0.100Ω. The position of the AC/DC switch (on the front panel) sends the voltage output of the current conditioner to either the True RMS Converter or the A/D Converter.

3-35. The 10 Amp function of the 8010A sends the measured current from the 10A input terminal through a separate current shunt of 0.01Ω. The voltage developed across the shunt is processed the same as all other current measurements.

3-36. RESISTANCE CONDITIONER

3-37. The resistance conditioner uses the same voltage divider as for voltage measurements. For resistance measurements the signal conditioner is used only as a reference resistor.

3-38. Your Multimeter uses the ratio method to measure an unknown resistance. Figure 3-3 (part C) shows a simplified schematic of the input signal conditioner for resistance and conductance measurements. The reference resistor is placed in series with the unknown resistance and a voltage source (V SOURCE) is applied across them. The ratio of the resistances equals the ratio of the voltage drops across the respective resistances:

$$\frac{\Omega\,\text{Unknown}}{\Omega\,\text{Reference}} = \frac{\text{V Unknown}}{\text{V Reference}}$$

The A/D Converter measures the voltage ratio and the value of the unknown resistance is calculated.

3-39. The voltage drop across the unknown resistance is applied to the HI and LO inputs of the A/D Converter. The voltage drop across the reference resistor is used as the reference voltage for the A/D Converter. The range switches select the reference resistance (from the voltage divider) and V SOURCE so that the inputs to the A/D Converter, stay within the proper range. The reference resistance is selected so that the output of the A/D Converter, displayed on the LCD, is the value of the unknown resistance.

3-40. CONDUCTANCE CONDITIONER

3-41. The method of measuring conductance is the same as for measuring resistance with one exception. The controller inside the custom IC commands the A/D Converter to interchange the unknown and reference voltage inputs. That is, the A/D Converter uses the reference voltage during the integrate period and the unknown voltage during the read period. This inverts the voltage ratio so the reciprocal of resistance (i.e., conductance) is displayed in the LCD.

3-42. RANGE SWITCHES

3-43. Though the range switches are not input signal conditioners, they do control the input signal conditioners so inputs to the Multimeter can be processed properly. In addition to the functions previously discussed, the range switches also position the decimal point on the LCD display.

3-44. Meter Protection Circuits

3-45. The various protection circuits in your Multimeter protect its critical circuits from accidental abuse, such as overvoltage conditions, overcurrent conditions, and making measurements with the wrong function selected. Even if the Multimeter is subjected to unreasonable abuse (i.e., applying 1000V on the 200Ω resistance range) the protection circuits will absorb the damage while protecting the more expensive (critical) circuits within. The following paragraphs on the protection circuits of the Multimeter are referenced to the Main PCB Assembly schematic in Section 8.

3-46. VOLTAGE MEASUREMENT PROTECTION

3-47. When the voltage measurement function is selected, the critical circuits of the Multimeter are protected from voltages slightly higher than the highest range, regardless of the selected range. If the input voltage is higher than the limit of the range selected, an overrange indication is displayed. The critical circuits are protected from input voltages above 1200V in the following manner: when an abnormally high voltage is applied to the voltage inputs, the resistance of the three varistors (RV1, RV2, and RV3) drops, clamping the Multimeter side of R2 to 1200V. These varistors can compensate for transients of up to 6000V. If the input voltage exceeds 6000V and generates enough heat to destroy R2, the resistor will destruct (open) without creating a potential fire hazard. Resistor R16 (1 MΩ, 1W) is a current-limiting resistor that protects U3 from dc voltage inputs of up to 1000V (on low ranges). Resistor R14 (100 kΩ, 2W) is a current limiting resistor that protects the input buffer of the True RMS Converter for inputs of 750V rms or 1000V peak continuous for the ±200 mV and ±2V ranges. On these two ranges, if a high level input is applied for more than the 10 second maximum, R14 may be damaged and no longer provide the proper protection. The input divider attenuation provides additional protection on all other ranges.

3-48. RESISTANCE/CONDUCTANCE MEASUREMENT PROTECTION

3-49. Selecting either the resistance or conductance measurement function places Q1, Q2, and RT1 in parallel with the meter across the resistance input and common lines. These three components provide protection from inputs up to 300V.

3-50. The LO RANGE Ω function of the 8012A has a separate input protection circuit rated to 300V. Refer to the schematic of the Low Ohms PCB in Section 8. The protection circuit must protect two separate parts, the 10 mA current source and the input to the op amp circuit. The op amp input is protected up to 300V by R59, CR51, and CR52. The 10 mA current source is protected by the circuit formed by R51, R52, Q51, and Q52. This circuit can withstand up to 700V. Diode CR50 protects the current source from negative voltages.

3-51. CURRENT MEASUREMENT PROTECTION

3-52. The mA input is protected two ways. Diode CR1 and IC U4 limit the voltage drop across the current shunts. Fuses F1 and F2 protect the current shunts from overcurrent conditions. Fuse F1 is a fast-blowing fuse rated for 2A at 250V. It is the type with a wire thread in a glass envelope. Under moderately abusive overloads F1 will open to protect the circuits. If the overload voltage is high enough, the voltage can arc through the metal vapor caused by F1 blowing. In this case, F2 opens. Fuse F2 is rated for 3A at 600V.

3-53. The 10A function of the 8010A has no fuse protection circuitry. However, it can handle overloads of up to 12A.

3-54. Power Supply

WARNING

LINE VOLTAGE POTENTIAL IS ON THE PRIMARY POWER CIRCUIT ANY TIME THE INSTRUMENT IS PLUGGED INTO A LINE POWER OUTLET.

3-55. The standard instrument can be ordered with a power supply that operates from 115V, 60 Hz; 100V, 50 Hz or 60 Hz selectable; and 230V, 50 Hz. This power supply provides all basic operating voltages for the instrument. These voltages are rectified and filtered but are not regulated. All regulated voltage needs are supplied either by U7 or by the custom IC, U3. The POWER switch opens/closes the secondary circuit. The power supply transformer (T1) is a self-limiting transformer and therefore no input line fuse is required.

3-56. An optional rechargeable battery pack is available for both Multimeters. This option allows the Multimeters to operate from 90V to 264V, 50 Hz or 60 Hz (selectable). Refer to Section 6 for additional information on the Rechargeable Battery Option.

3-57. Touch and Hold Circuit

3-58. The touch and hold circuit allows the use of the optional Touch and Hold Probe with your instrument. Refer to the Main PCB Assembly schematic in Section 8. The CL2 line to the crystal Y1 continues to the left, passing through Q4 and Q3 to ground. This path allows the crystal to oscillate. If a ground is applied to the mA terminal, Q3 is turned off, stopping the instrument clock. The last value displayed on the LCD remains displayed for a few minutes if the mA terminal is kept grounded.

CAUTION

The Touch and Hold function is meant to be used for intervals of no longer than a few minutes. If the display is stopped for longer periods of time (about 1/2 hour) the outline of the digits may remain for a few hours after the display is started again. Even longer periods of time may cause permanent damage.

static awareness

A Message From

John Fluke Mfg. Co., Inc.

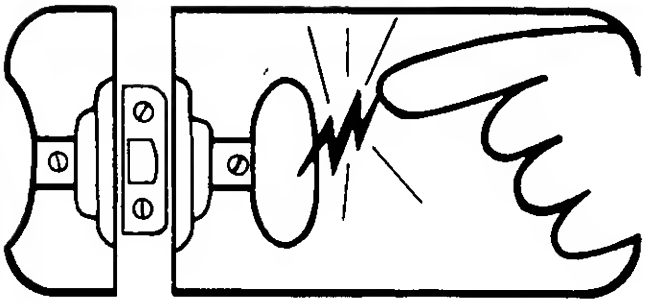

Some semiconductors and custom IC's can be damaged by electrostatic discharge during handling. This notice explains how you can minimize the chances of destroying such devices by:

1. Knowing that there is a problem.
2. Learning the guidelines for handling them.
3. Using the procedures, and packaging and bench techniques that are recommended.

The Static Sensitive (S.S.) devices are identified in the Fluke technical manual parts list with the symbol

" ⊗ "

The following practices should be followed to minimize damage to S.S. devices.

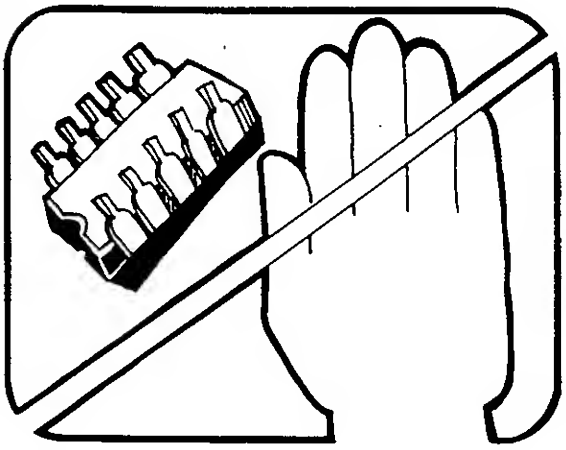

1. MINIMIZE HANDLING

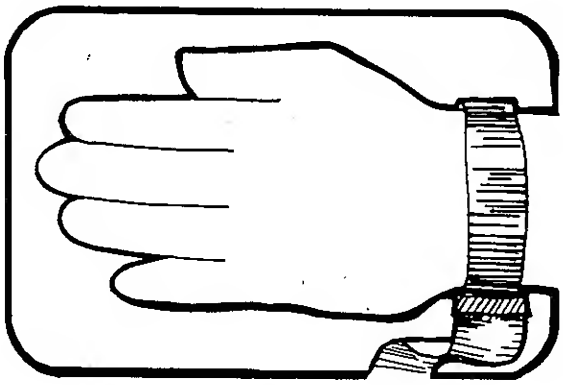

3. DISCHARGE PERSONAL STATIC BEFORE HANDLING DEVICES

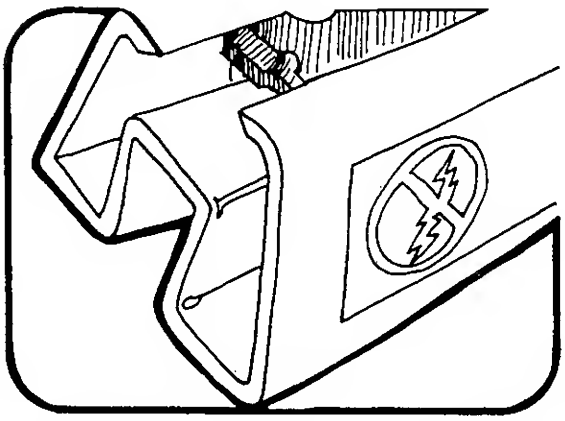

2. KEEP PARTS IN ORIGINAL CONTAINERS UNTIL READY FOR USE.

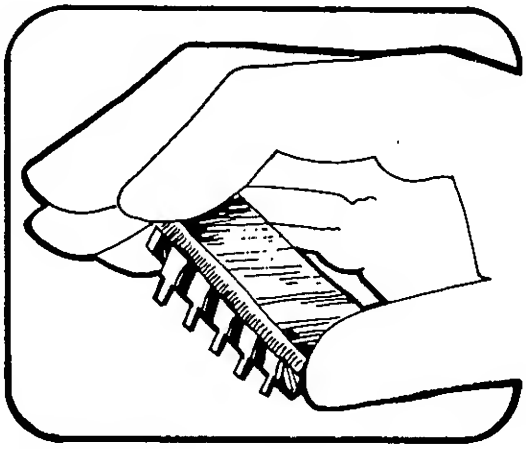

4. HANDLE S.S. DEVICES BY THE BODY

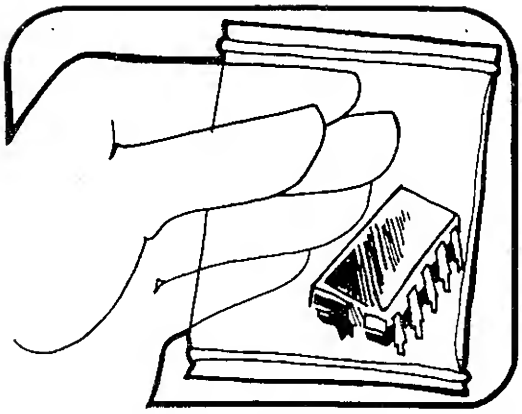

5. USE ANTI-STATIC CONTAINERS FOR HANDLING AND TRANSPORT

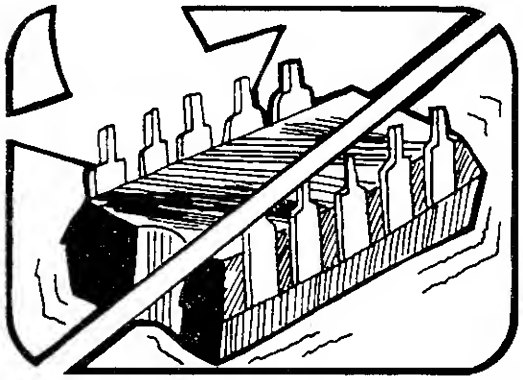

6. DO NOT SLIDE S.S. DEVICES OVER ANY SURFACE

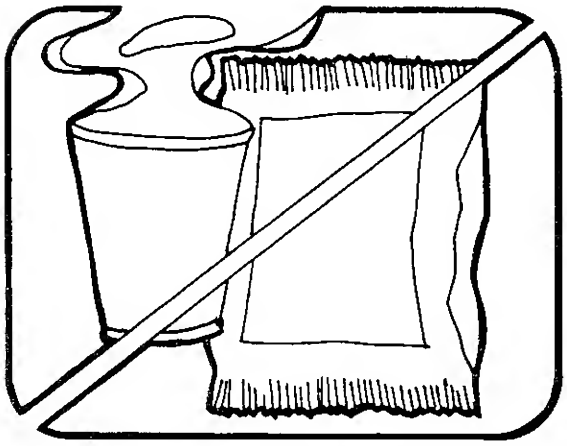

7. AVOID PLASTIC, VINYL AND STYROFOAM® IN WORK AREA

PORTIONS REPRINTED
WITH PERMISSION FROM TEKTRONIX, INC.
AND GENERAL DYNAMICS, POMONA DIV.

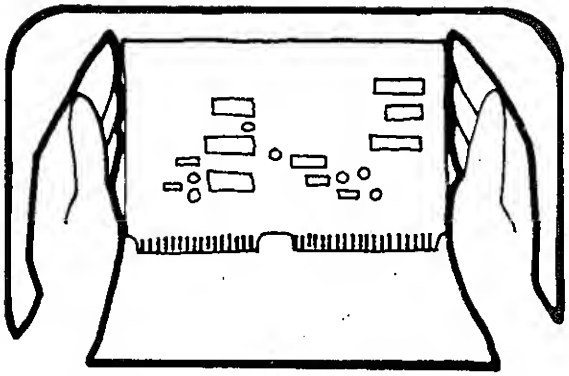

8. WHEN REMOVING PLUG-IN ASSEMBLIES, HANDLE ONLY BY NON-CONDUCTIVE EDGES AND NEVER TOUCH OPEN EDGE CONNECTOR EXCEPT AT STATIC-FREE WORK STATION. PLACING SHORTING STRIPS ON EDGE CONNECTOR USUALLY PROVIDES COMPLETE PROTECTION TO INSTALLED SS DEVICES.

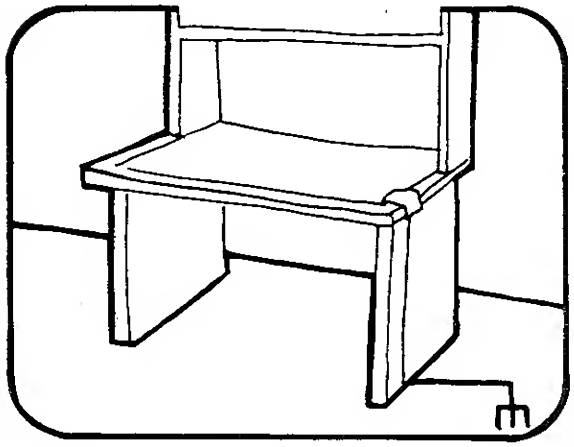

9. HANDLE S.S. DEVICES ONLY AT A STATIC-FREE WORK STATION
10. ONLY ANTI-STATIC TYPE SOLDER-SUCKERS SHOULD BE USED.
11. ONLY GROUNDED TIP SOLDERING IRONS SHOULD BE USED.

Anti-static bags, for storing S.S. devices or pcbs with these devices on them, can be ordered from the John Fluke Mfg. Co., Inc.. See section 5 in any Fluke technical manual for ordering instructions. Use the following part numbers when ordering these special bags.

John Fluke Part No.	Description
680892	5" x 8" Bag
680934	8" x 10" Bag
680942	8" x 12" Bag
680983	12" x 16" Bag
681023	18" x 18" Bag
Pink Poly Sheet 30" x 60" x 60 Mil P/N RC-AS-1200 $20.00	Wrist Strap P/N TL6-60 $7.00

® Dow Chemical

J0089C-07U8412/SE EN Litho in U.S.A.

Section 4
Maintenance

WARNING

THESE SERVICE INSTRUCTIONS ARE FOR USE BY QUALIFIED PERSONNEL ONLY. TO AVOID ELECTRIC SHOCK, DO NOT PERFORM ANY SERVICING OTHER THAN THAT CONTAINED IN THE OPERATING INSTRUCTIONS UNLESS YOU ARE QUALIFIED TO DO SO.

4-1. INTRODUCTION

4-2. This section of the manual contains maintenance information for both the Model 8010A and the Model 8012A Digital Multimeters. This maintenance information is divided into service information, general maintenance, a performance test, a calibration procedure, and a troubleshooting procedure. The Performance Test is recommended as an acceptance test when the instrument is first received, and later as a preventive maintenance tool to verify proper instrument operation. A 1-year calibration cycle is recommended to maintain the specifications given in Section 1. The test equipment required for both the performance test and calibration procedure is listed in Table 4-1. If the recommended equipment is not available, instruments having equivalent specifications may be used.

4-3. SERVICE INFORMATION

4-4. The 8010A and 8012A are both warranted for a period of 1-year upon delivery to the original purchaser. Conditions of the warranty are given at the front of this manual.

4-5. Malfunctions which occur within the limits of the warranty will be corrected at no charge. Mail the instrument (post paid) to your nearest authorized Fluke Technical Service Center. A list of Fluke Technical Service Centers is given in Section 5. Dated proof of purchase is required for all in-warranty repairs.

4-6. Factory authorized service centers are also available for calibration and/or repair of instruments that are beyond their warranty period. Contact your nearest authorized Fluke Technical Service Center for a cost quotation. Ship the instrument and your remittance according to the instructions given by the Service Center.

4-7. GENERAL INFORMATION

4-8. Interior Access

NOTE

To avoid contaminating the pcb with oil from the fingers, handle it by the edges or wear gloves. If the pcb does become contaminated, refer to the cleaning procedures given later in this section.

4-9. CALIBRATION ACCESS

4-10. Use the following procedure to gain access to the calibration adjustments of your instrument:

1. Set the POWER switch to OFF.
2. Disconnect the power cord from rear of the instrument.
3. Remove screw located directly below the power receptacle.
4. Grasp the front panel and slide the instrument out of the case.
5. Turn the instrument upside down.
6. All calibration adjustments are now accessible.

NOTE

With the power cord replaced, the instrument is operational for troubleshooting.

WARNING

DANGEROUS VOLTAGES EXIST ON THE PCB ASSEMBLIES WHEN ENERGIZED. EXERCISE EXTREME CARE WHEN WORKING ON AN ENERGIZED CIRCUIT.

7. To reassemble, reverse the previous procedures in a logical order.

4-11. LOW OHMS PCB REMOVAL (8012A only)

4-12. Use the following procedure to remove the Low Ohms PCB Assembly from the instrument:

1. Perform the Calibration Access procedure.
2. Remove all three screws holding the Low Ohms PCB Assembly.
3. Unplug the LO RANGE Ω input lead from the front panel terminal.
4. Pull the ZERO control knob off its extender shaft.
5. Unplug the seven wire cable at the Low Ohms PCB connector.
6. To reassemble, reverse the previous procedures in a logical order.

4-13. MAIN PCB ACCESS

4-14. Use the following procedure to access the Main PCB Assembly:

1. Perform the Calibration Access procedure.
2. Remove the two screws holding the top shield in place and then remove the shield. (If you are working on an 8012A, perform the Low Ohms PCB Removal procedure.)
3. Remove the two screws from the rear of the bottom shield and remove the bottom shield.
4. To reassemble, reverse the previous procedures in a logical order.

NOTE

When reinstalling the Main PCB Assembly, ensure that the pcb and the shield are properly set in their appropriate guides.

Table 4-1. List of Recommended Test Equipment

INSTRUMENT TYPE	REQUIRED CHARACTERISTICS	RECOMMENDED MODEL
DMM Calibrator	DC Voltage: 0 to 1000V ±.05% AC Voltage: 100 Hz - 0 to 200V ±.05% 0 to 750V ±.8% 1 kHz - 0 to 250V ±.05% 10 kHz - 0 to 110V ±.3% 50 kHz - 0 to 20V ±.5% DC Current: 0 to 2000 mA ±.04% AC Current: 0 to 200 μA ±.01% Resistance: 0 to 10 MΩ in steps of power-of-ten ±.05%	John Fluke Model 5100A
DMM	Read true rms: 0 to 12V ±1%	John Fluke Model 8010A, 8012A, 8012A, 8020A or 8000A
Calibration Leads	One red, one black - 24" spade lug to banana connector	Pomona 1987-24
Low Ohms Calibration Lead	8 inch patch cord, male banana to male banana	Pomona 1985-8
19 Ohm Test Set 1.90 Ohm Test Set	19 ±.05%Ω resistance 1.9 ±.05%Ω resistance	See text on Special Test Devices presented later in this Section.

4-15. FRONT PANEL REMOVAL

4-16. Use the following procedure to remove the front panel of the instrument from the Main PCB Assembly:

1. Complete the Main PCB Access procedure.
2. Disconnect the following wires from the front panel by grasping the snap connector fitting and pulling firmly:
   a. The V/kΩ/S input line (white).
   b. The COMMON input line (black).
   c. If you are working on an 8010A, also remove the 10A input line (purple).
3. Remove the mA input line (white) using the following steps:
   a. On the front panel, insert a coin or wide blade screw driver into the slot on the mA terminal and turn the mA terminal 1/4 turn counter-clockwise. Remove the fuse and holder.
   b. Bend a small hook in the end of a paper clip (or equivalent).
   c. Pull the wire up through the fuse holder slot.
   d. Keep tension on the wire so that the rear end of the spring is as shown in Figure 4-1, part A.
   e. Insert the hook of the paper clip as shown in Figure 4-1 part A. Gently pry upwards until a few turns of the spring are free from the fuse holder.
   f. Grasp the spring as shown in Figure 4-1, part B and turn counterclockwise until the spring comes completely free of the fuse holder.
   g. Slide the spring down the wire towards the Main PCB.
   h. Push the wire back inside the slot in the fuse holder.
   i. With the paper clip, pry the spring retainer free of the fuse holder as shown in Figure 4-1, part C.
   j. Pull the wire free of the slot in the fuse holder. Figure 4-1, part D shows the mA input line free of the fuse holder.
   k. Reinstall the fuse and fuse holder.
4. Turn the instrument right side up.
5. Remove the two screws that connect the front panel to the Main PCB Assembly. The screws are located at the front of the instrument, right side.
6. Carefully pull the front panel free of the switches.
7. To replace the front panel, reverse the preceding procedures in a logical order.

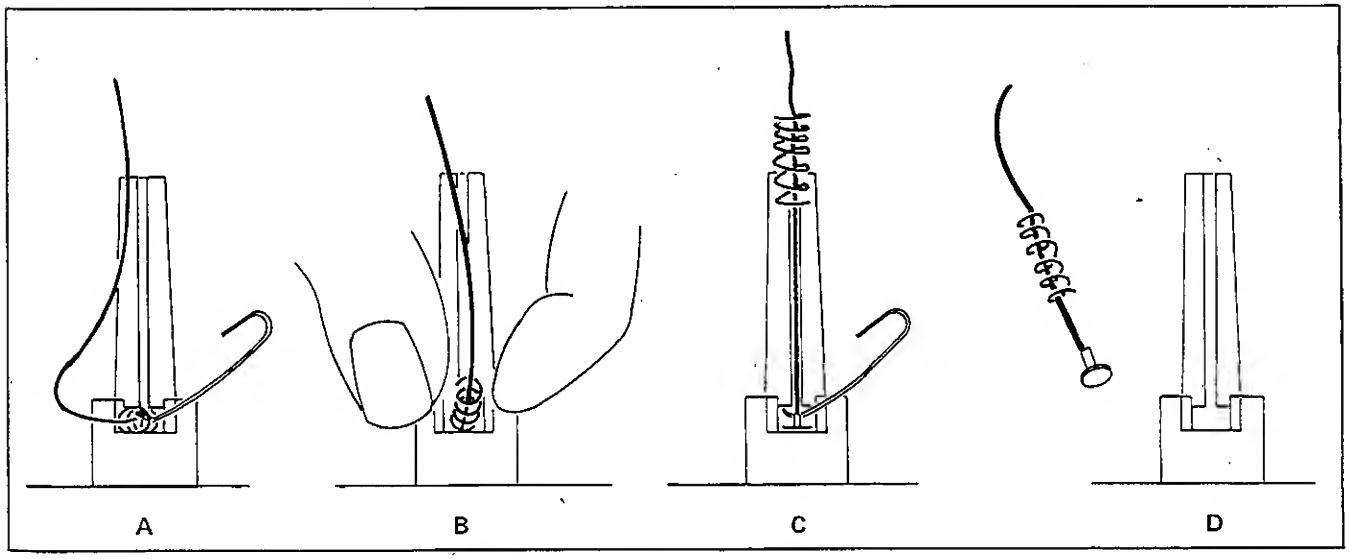

Figure 4-1. Removing the mA Input Line

4-17. DISPLAY REMOVAL

4-18. Use the following procedure to remove the LCD:

1. Preform the Main PCB Access procedure.

2. Turn the instrument right side up.

3. Remove the two screws that connect the Main PCB Assembly and the Front Panel Assembly. The screws are located at the right front of the instrument.

4. Carefully slide the front panel forward until it is clear of the switches and the LCD. Let the Front Panel Assembly drop clear of the LCD.

5. Remove the two screws connecting the LCD to the Main PCB Assembly.

6. Place your fingernail under the grey tabs on the display frame and lift them free of the screwposts on the display mounting bracket.

7. Rotate the display frame forward and down until the two hooks on the bottom of the display frame release the display mounting bracket.

8. The LCD may now be lifted free from the display mounting bracket.

9. A small length of flat, flexible material may fall out. This is the "zebra strip" an elastomeric strip of alternate areas of conductive and non-conductive material. When the screws are tightened to hold down the display assembly, the zebra strip provides electrical contact between the pins on the LCD and the land pattern on the Main PCB. The zebra strip is located in a channel on the display mounting bracket.

10. To reassemble, reverse the previous procedures in a logical order.

4-19. Cleaning

CAUTION

Do not use aromatic hydrocarbons or chlorinated solvents for cleaning. These solutions will react with the plastic materials used in the instrument.

CAUTION

Do not get the liquid crystal display wet. Remove the display assembly before washing the pcb and do not install it until the pcb has completely dried.

4-20. Clean the front panel and case with a mild solution of detergent and water. Clean dust from the circuit board with clean, dry, low pressure air (<20 psi). Contaminates can be removed from the pcb with demineralized water and a soft brush (remove the LCD before washing the Main PCB Assembly and avoid getting excessive amounts of water on the switches). Dry with clean, dry, low pressure air, and then bake at 50°C to 60°C (124°F to 140°F) for 24 hours.

4-21. Special Test Devices

4-22. There are two devices which you can make that will improve the efficiency and accuracy of the Calibration Procedure. The two devices are the 19Ω Test Set and the 1.9Ω Test Set. They insure good electrical contact and consistent results. The following paragraphs describes the construction of the Special Test Devices.

4-23. 19Ω TEST SET

4-24. The components needed are: one 19Ω ±0.05% precision resistor and one single banana connector with two isolated terminals. The Pomona, Two Terminal Isolation connector (Model number 1390-2) and the Dale Electronics, Inc. 19Ω Precision Resistor (RS-1/4) are recommended for constructing the 19Ω Test Set. Refer to Figure 4-2 for assembly instructions.

4-25. 1.9Ω TEST SET

4-26. The components needed are: one 1.9Ω ±0.05% precision resistor and one single banana connector with two isolated terminals. The Pomona, Two Terminal Isolation connector (Model number 1390-2) and the Dale Electronics, Inc. 1.9Ω Precision (RS-1/4) are recommended for constructing the 1.9Ω Test Set. Refer to Figure 4-2 for assembly instructions.

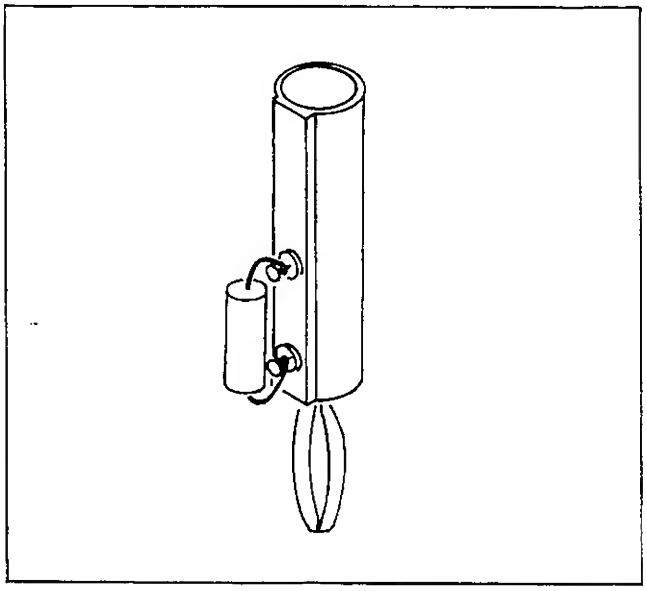

Figure 4-2. 19Ω and 1.9Ω Test Sets

4-27. PERFORMANCE TEST

4-28. The performance test compares the performance of your Multimeter with the list of specifications given in Section 1. This test is recommended for incoming inspection, as a preventive maintenance check, and to verify the specifications. If the instrument fails any part of the performance test, calibration and/or repair is indicated.

4-29. Allow the instrument to stabilize and perform the test at an ambient temperature of 23°C ±5°C (73°F ±9°F). During the performance test (and the calibration procedure) your Multimeter is referred to as the UUT (Unit Under Test).

4-30. Display Test

4-31. Use the following procedure to verify the proper operation of the LCD:

1. On the UUT, set the POWER switch to the ON position.
2. On the UUT, select the kΩ function, 2000 kΩ range. Verify that the overrange indication (1) appears on the LCD.
3. On the UUT, select the V DC function. Verify a display reading of "000".
4. Connect the Low Ohms Calibration Lead between the V/kΩ/S and COMMON input terminals.
5. Refer to Table 4-2, verify the proper position of the decimal point for each range shown.
6. Remove the Low Ohms Calibration Lead.
7. Connect the HI output of the DMM Calibrator to the V/kΩ/S input of the UUT. Connect the LO output of the DMM Calibrator to the COMMON input terminal of the UUT.

Table 4-2. Display Test

RANGE	DISPLAY READING
200 mV	00.0
2V	.000
20V	0.00
200V	00.0
1000V	000
10A/20 MΩ	0.00

8. On the UUT, select the DC V function, 20V range.
9. Set the DMM Calibrator for an output of −18.88V dc. Verify that all segments of the digits are illuminated.

4-32. Resistance/Conductance Test

4-33. Use the following procedure to verify the proper operation and performance of the resistance and conductance ranges:

1. On the UUT, connect the Low Ohms Calibration Lead between the V/kΩ/S and COMMON input terminals.
2. On the UUT, select the kΩ function, 200Ω range. Verify that the display reading is between "00.0" and "00.2".
3. Remove the Low Ohms Calibration Lead.
4. On the UUT, select the S function 200 nS range. Verify that the display reading is between "00.0" and "01.0".
5. Connect the HI output of the DMM Calibrator to the V/kΩ/S input terminal of the UUT. Connect the LO output of the Multimeter Calibrator to the COMMON input terminal of the UUT.
6. For each step in Table 4-3, select the range shown and adjust the DMM Calibrator to the required UUT resistance input, then verify that the UUT display reading is within limits.

Table 4-3. Resistance/Conductance Test

STEP	RANGE	UUT INPUT	DISPLAY READING
1	200Ω	100Ω	99.7 to 100.3
2	2 kΩ	1 kΩ	997 to 1003
3	20 kΩ	10 kΩ	9.97 to 10.03
4	200 kΩ	100 kΩ	99.7 to 100.3
5	2000 kΩ	1 MΩ	994 to 1006
6	20 MΩ	10 MΩ	9.94 to 10.06
7	2 mS	1 kΩ	0.997 to 1.003
8	20 μS	100 kΩ	9.97 to 10.03
9	200 nS	10 MΩ	98.0 to 102.0
10	2 mS	OPEN	.000
11	20 μS	OPEN	0.00
12	200 nS	OPEN	00.0

4-34. LO RANGE Ω Test (8012A Only)

4-35. Use the following procedure to verify the proper operation and accuracy of the Low Ohms function in the 8012A:

1. On the UUT, select the LO RANGE Ω function, 2Ω range.
2. Connect the Low Ohms Calibration Lead between the LO RANGE Ω and COMMON input terminals.
3. Adjust the front panel ZERO control for a display reading of all zeros.
4. Remove the Low Ohms Calibration Lead from the COMMON input terminal.
5. Plug the 1.9Ω Test Set into the COMMON input terminal, and connect Low Ohms Calibration Lead to the 1.9Ω Test Set.
6. Verify that the display reading is between "1.879" and "1.921".
7. On the UUT, select the 20Ω range and replace the 1.9Ω Test Set with the 19Ω Test Set.
8. Verify that the display reading is between "18.88" and "19.12".

4-36. DC Voltage Test

4-37. Use the following procedure to verify the proper operation and accuracy of the DC Voltage function:

1. Connect the HI output of the DMM Calibrator to the V/kΩ/S input terminal of the UUT. Connect the LO output of the DMM Calibrator to the COMMON input of the UUT.
2. On the UUT, select the DC V function.
3. For each step in Table 4-4, select the range shown and adjust the DMM Calibrator to the required UUT voltage input, then verify that the UUT display reading is within limits.

Table 4-4. DC Voltage Test

STEP	RANGE	UUT INPUT	DISPLAY READING
1	20 mV	+190.0 mV	+189.7 to +190.3
2	2V	+1.900V	+1.897 to +1.903
3	20V	+19.00V	+18.97 to +19.03
4	20V	−19.00V	−18.97 to −19.03
5	200V	+190.0V	+189.7 to +190.3
6	1000V	+1000V	+998 to +1002

4-38. RMS Converter Offset Test

4-39. Use the following procedure to verify the proper dc offset of the rms converter:

1. On the UUT, select the AC V function, any range.
2. On the UUT, connect the Low Ohms Calibration Lead between the V/kΩ/S and COMMON terminals.
3. On the UUT, measure and record the voltage level on TP1 with the DMM.

NOTE

Refer to Figure 4-3 for the location of TP1 and TP2.

4. Verify that the voltage level at TP1 (in Step 3) is between −20 mV and 20 mV.
5. Measure the voltage level on TP2. Verify that the voltage level on TP2 is within 1 mV of the level recorded in Step 3 (at TP1).

4-40. AC Voltage Test

4-41. Use the following procedure to verify the proper operation and accuracy of the AC Voltage function:

1. Connect the HI output of the DMM Calibrator to the V/kΩ/S input terminal of the UUT. Connect the LO output of the DMM Calibrator to the COMMON input terminal of the UUT.
2. On the UUT, select the AC V function.
3. For each step in Table 4-5, select the range shown and adjust the DMM Calibrator to the required UUT voltage input, then verify that the UUT display reading is within limits.

4-42. DC Current Test

4-43. Use the following procedure to verify the proper operation and accuracy of the DC Current function:

1. Connect the HI output of the DMM Calibrator to the mA input terminal of the UUT. Connect the LO output of the DMM Calibrator to the COMMON input terminal of the UUT.
2. On the UUT, select the DC mA/A function.
3. For each step in Table 4-6, select the range shown and adjust the DMM Calibrator to the required UUT current input, then verify that the UUT display reading is within limits.

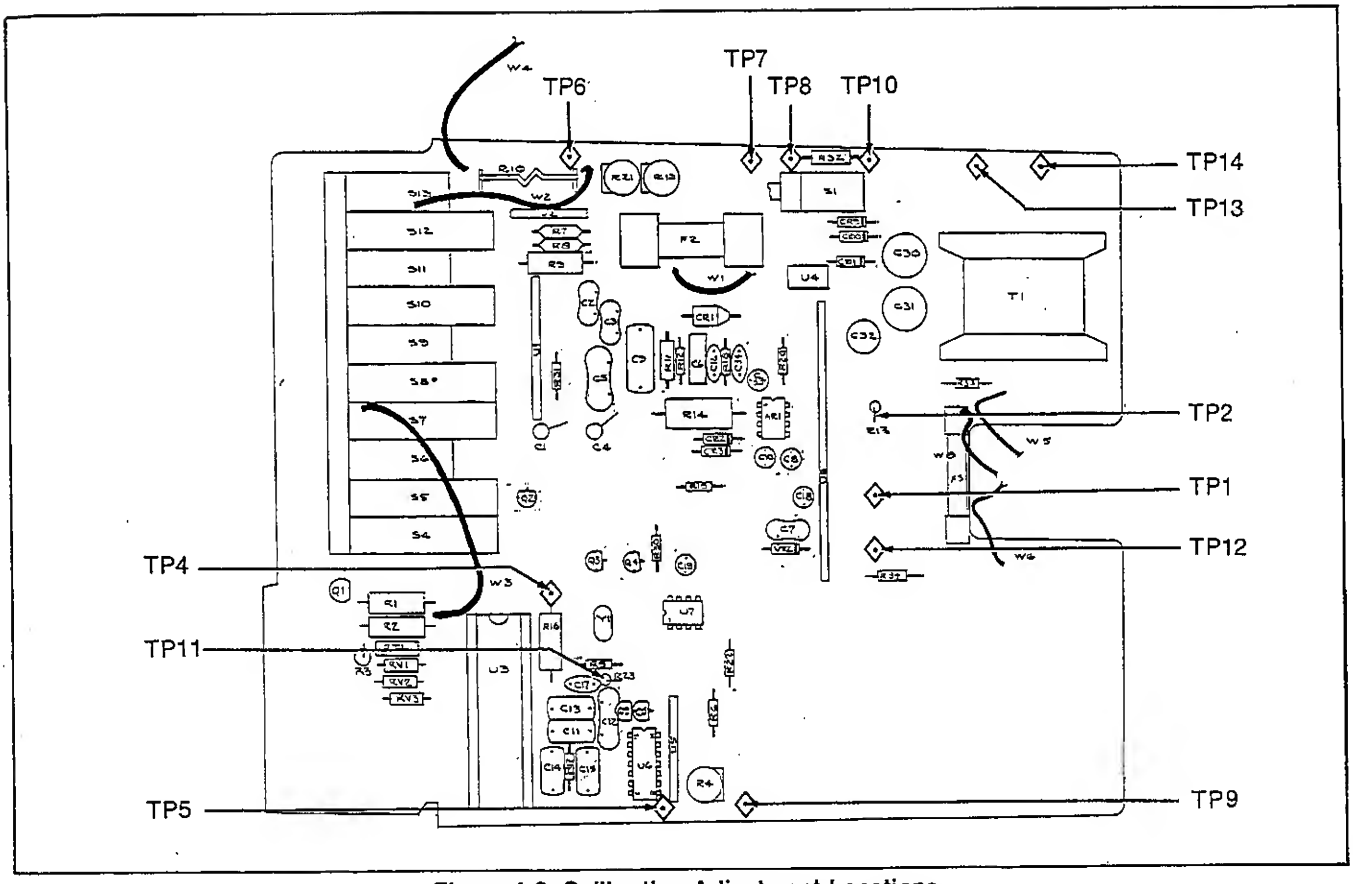

Figure 4-3. Calibration Adjustment Locations

4-44. AC Current Test

4-45. Use the following procedure to verify the proper operation and accuracy of the DC Current function:

1. Connect the HI output of the DMM Calibrator to the mA input terminal of the UUT. Connect the LO output of the DMM Calibrator to the COMMON input terminal of the UUT.

Table 4-5. AC Voltage Test

STEP	RANGE	UUT INPUT		DISPLAY READING
		LEVEL	FREQ	
1	200 mV	190.0 mV	100 Hz	188.8 to 191.2
2	200 mV	10.0 mV	100 Hz	9.8 to 10.2
3	2V	1.900V	100 Hz	1.888 to 1.912
4	20V	19.00V	100 Hz	18.88 to 19.12
5	200V	190.0V	100 Hz	188.8 to 191.2
6	750V	750V	100 Hz	744 to 756
7	750V	250V	1 kHz	247 to 253
8	20V	1.00V	10 kHz	0.97 to 1.03
9	20V	19.00V	10 kHz	18.79 to 19.21
10	200V	110.0V	10 kHz	108.7 to 111.3
11	20V	19.00V	50 kHz	18.03 to 19.97

2. On the UUT, select the AC mA/A function, 200 μA range.

3. Set the DMM Calibrator for an output level of 190.0 μA at a frequency of 1 kHz. Verify that the display reading is between "187.9" and "192.1".

4-46. 10A Current Test (8010A Only)

4-47. Use the following procedure to verify the proper operation and accuracy of the 10A Range function of the 8010A:

1. Connect the HI output of the DMM Calibrator to the 10A input terminal on the UUT. Connect the LO output of the DMM Calibrator to the COMMON input terminal on the UUT.

Table 4-6. DC mA Test

STEP	RANGE	UUT INPUT	DISPLAY READINGS
1	200 μA	190.0 μA	189.3 to 190.7
2	2 mA	1.900 mA	1.893 to 1.907
3	20 mA	19.00 mA	18.93 to 19.07
4	200 mA	190.0 mA	189.3 to 190.7
5	2000 mA	1900 mA	1893 to 1907

2. On the UUT, select the DC mA/A function, 10A range.

3. Set the DMM Calibrator for an output of 1900 mA dc. Verify that the display reading is between "1.88" and "1.92".

4-48. CALIBRATION PROCEDURE

4-49. The Calibration Procedure should be used any time your instrument has been repaired or fails to pass the Performance Test. The Calibration Procedure consists of four parts:

- The Turn-On Check verifies the proper power supply voltages which is a basic necessity of calibration.
- The DC Calibration Adjustment calibrates the dc voltage, dc current, resistance, and conductance circuits.
- The AC Calibration Adjustment calibrates all the ac voltage and ac current circuits.
- The Low Ohms Calibration Adjustment calibrates the low ohms circuit of the 8012A.

Before starting the Calibration procedure, perform the Calibration Access procedure given earlier in this section. Refer to Figure 4-3 for the location of the Calibration Adjustments. During the Calibration procedure, your Multimeter is referred to as the UUT (Unit Under Test).

NOTE

Before beginning the Calibration procedure, set the POWER switch (on the UUT) to ON and allow the instrument to stabilize for approximately 5 minutes. Perform all calibration adjustments at an ambient temperature of 23° C ±5° C (79° F ±9° F).

WARNING

CALIBRATION ADJUSTMENTS ARE PERFORMED ON ENERGIZED CIRCUITS. EXERCISE CAUTION AT ALL TIMES, AND USE A NON-CONDUCTIVE TOOL FOR ALL ADJUSTMENTS.

4-50. Power Supply Check

CAUTION

Do not use this procedure if your instrument contains the Rechargeable Battery Option.

4-51. Use the following procedure to verify the power supply voltages:

1. On the UUT, select the DC V function, 200V range. Verify that the display reading is "00.0" ± one digit.

2. For each test point in Table 4-7, use the DMM to verify the voltage limits specified for your Multimeter. (Measurement values given in Table 4-7 referenced to ground at TP6.)

4-52. DC Calibration Adjustment

4-53. Use the following procedure to calibrate the DC Voltage, DC Current, Resistance, and Conductance functions:

1. On the UUT, select the DC V function, 2V range.

2. Connect the HI output terminal of the DMM Calibrator to the V/kΩ/S input terminal of the UUT. Connect the LO output terminal of the DMM Calibrator to the COMMON input terminal of the UUT.

3. Set the DMM Calibrator for a dc output of 1.888V.

Table 4-7. Power Supply Voltages

TEST POINT	VOLTAGE FUNCTION	VOLTAGE LIMITS		
		FOR 115V, 60 Hz INSTRUMENTS	FOR 100V, 50-60 Hz INSTRUMENTS	FOR 230V, 50 Hz INSTRUMENTS
TP5	DIGITAL REFERENCE	−2.1 ± 0.4V	−2.1 ± 0.4V	−2.1 ± 0.4V
TP7	−VSS	−6.5 ± 1V	−4.7 ± 1V	−6.5 ± 1V
TP8	−VA	−15 ± 1V	−11 ± 1V	−15 ± 1V
TP9	+VDD	+2.9 ± 0.3V	+2.9 ± 0.3V	+2.9 ± 0.3V
TP10	+VA	+15 ± 1V	+11 ± 1V	+15 ± 1V

4. On the UUT, adjust R4 (DC CAL) for a display reading of exactly "1.888".

5. Reverse the input leads (V/kΩ/S and COMMON) on the UUT. Verify that the display reading is between "–1.887" and "–1.889".

6. If necessary, adjust R4 until the readings of Step 4 and 5 are within 1 digit of 1.888V.

4-54. RMS Converter DC Offset Adjustment

4-55. Use the following procedure to adjust the dc offset of the rms converter:

1. On the UUT, select the AC V function, any range.

2. Connect the Low Ohms Calibration Lead between the V/kΩ/S and COMMON input terminals.

3. Measure and record the voltage level on TP1 using the DMM. Verify that the level at TP1 is between –20 mV and 20 mV.

4. Connect the DMM to TP2.

5. Adjust R7 on the rms hybrid network so that the voltage level on TP2 is within 0.5 mV of the level recorded on TP1.

4-56. AC Calibration Adjustment

4-57. There are four interacting adjustments in this procedure. Two potentiometers set the low and high levels at low frequencies, and two variable capacitors set the high levels at high frequency. Use the following procedure to calibrate AC Voltage and AC Current functions:

1. On the UUT, select AC V, 2V range.

2. Set the DMM Calibrator for an output of 1.900V at a frequency of 100 Hz.

3. Connect the HI output of the DMM Calibrator to the V/kΩ/S input of the UUT. Connect the LO output of the DMM Calibrator to the COMMON input of the UUT.

4. Adjust R19 (AC HI) for a display reading of exactly "1.900".

5. Set the DMM Calibrator for an output of 190.0 mV at 100 Hz.

6. Adjust R21 (AC LO) for a display reading of exactly ".190".

7. The adjustments of R19 and R21 interact. Repeat steps 1 through 6 of this procedure until both readings are within 1 count of the designated values.

8. On the UUT, select the 20V range.

9. Set the DMM Calibrator for an output of 19.00V at a frequency of 10 kHz.

10. Adjust C1 for a display reading of exactly "19.00".

11. On the UUT, select the 200V range.

12. Set the DMM Calibrator for an output of 110.0V at a frequency of 10 kHz.

13. Adjust C4 for a display reading of exactly "110.0".

14. If any adjustments were made in this procedure, repeat Steps 1 through 13.

4-58. LO RANGE Ω Calibration Adjustment (8012A Only)

4-59. Use the following procedure to calibrate the circuits of the LO RANGE Ω function:

1. On the UUT, select the LO RANGE Ω function, 20Ω range.

2. On the UUT, connect the Low Ohms Calibration Lead between the COMMON and LO RANGE Ω input terminals.

3. Adjust the front panel ZERO control until the display reading is all zeros.

4. Remove the Low Ohms Calibration Lead from the COMMON terminal, plug the 19Ω Test Set into the COMMON terminal and plug the Low Ohms Calibration Lead into the 19Ω Test Set.

5. Adjust R57 for an display reading of exactly "19.00".

6. Replace the 19Ω Test Set with the 1.9Ω Test Set.

7. On the UUT, select the 2Ω range.

8. Verify that the display reading is between "1.879" and "1.921".

4-60. TROUBLESHOOTING

CAUTION

Static discharge can damage MOS components contained in your instrument. Observe the precautions given in the Static Awareness Sheet at the front of this section.

4-61. A troubleshooting guide for your instrument is give in Table 4-8. To use this guide, complete the Performance Test (given earlier in this section) and note any discrepancies. If your Multimeter fails a procedure, locate the heading of that procedure under the Test and Symptom column of Table 4-7. Find the symptom that describes the problem which occurred during the procedure. Note the possible causes of the malfunction under the Possible Cause heading. Details necessary to isolate a particular cause can be derived from the theory of operation in Section 3 and the schematic diagrams in Section 7. Table 4-9 lists the test points in the instrument.

Table 4-8. Troubleshooting Guide

TEST AND SYMPTOM	POSSIBLE CAUSE
INITIAL PROCEDURE	
Display blank	Power supply, power switch, U3.
DISPLAY TEST	
One or more segments will not light through entire test.	Display interconnection, display, or A/D Converter U3.
Decade inoperative or one or more segments always lit.	U3.
Improper decimal point indication.	Range switches, U5, U6, or display. (Check signals at U6 to isolate.)
Minus sign improperly displayed.	U3.
Display lit but does not respond to changes in input.	Reference U7, crystal U1, A/D Converter U3, Touch and Hold signal line grounded, Q3, Q4.
RESISTANCE/CONDUCTANCE TEST	
Displayed reading is out of tolerance on at least one but not all ranges.	Range resistor U1 or R3.
Readings are noisy on all ranges.	Thermistor RT1.
Readings are out of tolerance on high ohms.	RV1, RV2, RV3 overheated from severe overload.
Residual reading with test leads open.	PCB is contaminated. (See cleaning procedure Section 4.)
DC VOLTAGE TEST	
Display reading is out of tolerance on 200 mV or 2V range.	Out of calibration (DC), Vref (U7, in error, R4, U3.)
Readings are out of tolerance on all ranges except 200 mV and 2V.	Range resistor U1.
AC VOLTAGE TEST	
Displayed reading is out of tolerance on 200 mV range.	Out of calibration (AC), AC converter defective.
Readings out of tolerance on all ranges except 200 mV.	Range resistor U1, C1, C4 out of calibration.
DC CURRENT TEST	
Input does not affect display.	Fuse F1, F2, CR1, U4.
Displayed reading is out of tolerance on one or more ranges.	R7, R8, R9, U2, R10.

Table 4-9. Test Points

TEST POINT	SIGNAL/CONNECTION	TEST POINT	SIGNAL/CONNECTION
TP1	RMS Converter	TP8	–VA
TP2	RMS Converter Input	TP9	+VDD
TP3	Compensation Network Input	TP10	+VA
TP4	A/D Converter HI Input	TP11	Range control input to A/D Converter
TP5	Digital Reference for A/D Converter Range	TP12	DC Reference Voltage
TP6	COMMON	TP13	Used with the –01 Option (Battery Charging Circuit)
TP7	–VSS	TP14	Used with the –01 Option (Battery Charging Circuit)

Section 5
List of Replaceable Parts

TABLE OF CONTENTS

TITLE	TABLE NO.	PAGE NO.	FIGURE NO.	PAGE NO.
Final Assembly	5-1	5-3	5-1	5-3
A1 Main PCB Assembly	5-2	5-4	5-2	5-7
A2 Low Ohms PCB Assembly	5-3	5-8	5-3	5-8

5-1. INTRODUCTION

5-2. This section contains an illustrated listing of replaceable parts for the 8010A and 8012A Digital Multimeters. Ordering procedures for parts and a cross-reference to federal supply codes are also provided in this section. Both mechanical and electrical components are listed by reference designators. Each assembly is accompanied by an illustration showing the part location and its reference designator.

5-3. PARTS ORDERING INFORMATION

5-4. Electrical components may be ordered directly from the manufacturer by using the manufacturer's part number, or from the John Fluke Mfg. Co., Inc. and its authorized representatives by using the part number under the heading FLUKE STOCK NO. Final assemblies are normally not available as a whole assembly.

5-5. To ensure prompt delivery of the correct part, include the following information.

1. Fluke Stock Number.
2. Description (as given under the DESCRIPTION heading).
3. Reference Designator.
4. Quantity.
5. Part Number and Revision Level of component's pcb.

5-6. Parts price information is available from the John Fluke Mfg. Co., Inc. or its representatives.

CAUTION

⊗

Indicated devices are subject to damage by static discharge.

Table 5-1. Final Assembly

ITEM NO.	DESCRIPTION	FLUKE STOCK NO.	MFG SPLY CODE	MFG PART NO. OR TYPE	TOT QTY	REC QTY	USE CDE
	8010A/8012A FINAL ASSEMBLY FIGURE 5-1 (8010A-T&B)						
A1⊘	MAIN PCB ASSEMBLY	ORDER	NEXT	HIGHER ASSY	1		
A2	LOW OHMS PCB ASSEMBLY	ORDER	NEXT	HIGHER ASSEMBLY	1		
H1	SCREW,PH,6-32 X 3/8	334458	89536	334458	1		
H2	SCREW,PH,6-20 X 3/8	228266	89536	228266	2		
H3	WASHER,FLAT	340505	89536	340505	1		
H4	TEST LEADS (NOT SHOWN)	343657	28480	21058	1		
MP1	DECAL,HANDLE,DISC	478248	89536	478248	1		
MP2	CASE,MOLDED	478008	89536	478008	1		
MP3	HANDLE, MOLDED	330092	89536	330092	1		
MP4	PAD,FOOT (NOT SHOWN)	338632	89536	338632	1		
MP5	DECAL,FRONT PANEL	ORDER	FOR	CORRECT MODEL	1		
	MODEL 8010A	473272	89536	473272	1		
	MODEL 8012A	477471	89536	477471	1		
MP6	DECAL,SPECIFICATION (NOT SHOWN)						
	MODEL 8010A	473280	89536	473280	1		
	MODEL 8012A	483992	89536	483992	1		
MP7	KNOB, CONTROL, ZERO	479626	89536	479626	1		
P1	SOCKET, 7 POS.(NOT SHOWN)	484030	00779	1583773-4	1		
W1	LINE CORD(NOT SHOWN)	ORDER	FOR	CORRECT SOURCE	1		
	8010A LINE MODEL						
	100V	488635	89536	488635			
	115V	488643	89536	488643			
	230V	488650	89536	488650			
	8010A-01 BATTERY MODEL						
	115/230V	488668	89536	488668			
	8012A LINE MODEL						
	100V	488676	89536	488676			
	115V	488684	89536	488684			
	230V	488692	89536	488692			
	8012A-01 BATTERY MODEL						
	115/230V	488700	89536	488700			

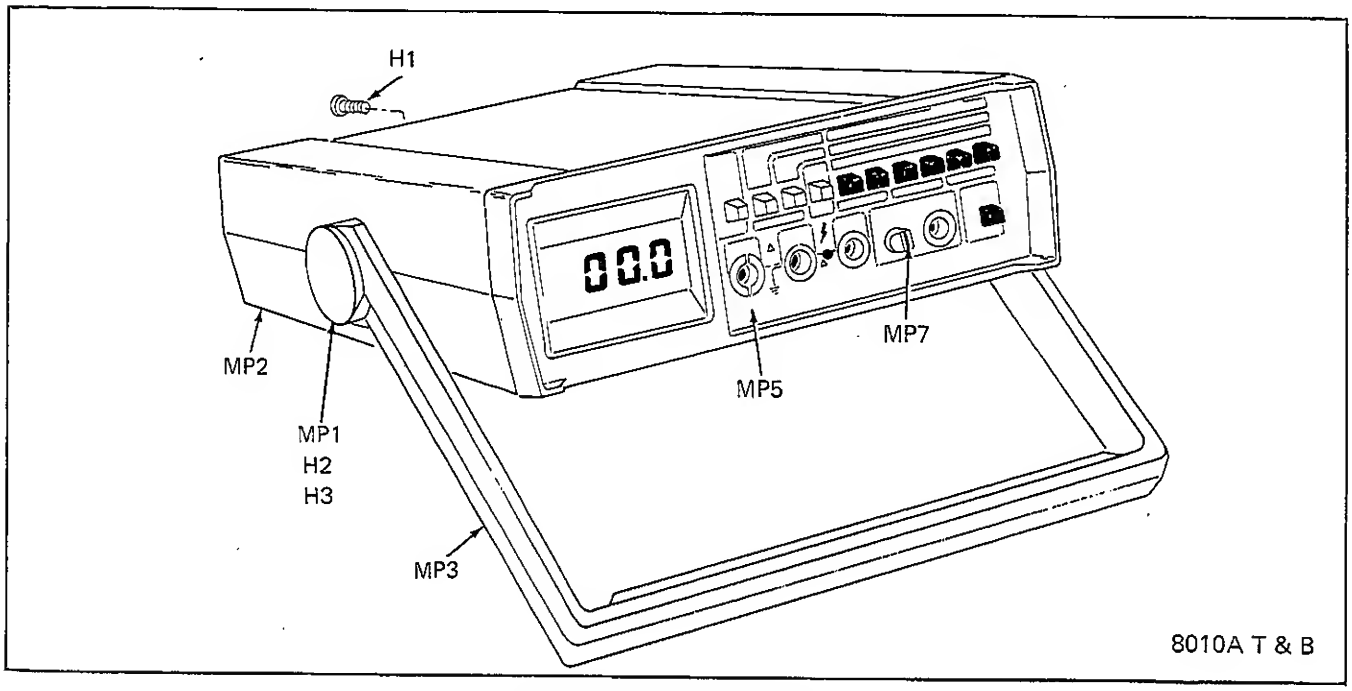

Figure 5-1. Final Assembly

Table 5-2. A1 Main PCB Assembly

ITEM NO.	DESCRIPTION	FLUKE STOCK NO.	MFG SPLY CODE	MFG PART NO. OR TYPE	TOT QTY	REC QTY	USE CDE
A1Ⓧ	MAIN PCB ASSEMBLY FIGURE 5-2 (8010A-4001)						
AR1	IC,LIN OP-AMP	609890	12040	LF351N	1	1	
C1	CAP,VAR,1.5PF-0.25PF,200V	218206	72982	530-000	2	1	
C2	CAP,MICA,150PF +/-5%,500V	148478	72136	DM15F151J	2		
C3	CAP,MICA,120PF +/-5%,500V	148486	72136	DM15F121J	1		
C4	CAP,VAR,1.5PF-0.25PF,200V	218206	72982	530-000	REF		
C5	CAP,MICA,2200PF +/-5%,500V	148346	72136	DM19F222J	REF		
C6	CAP,MYLAR,0.047UF +/-10%,250V	162008	73445	C280AMAE47K	1		
C7	CAP,MICA,150PF +/-5%,500V	148478	72136	DM15F151J	REF		
C8	CAP,TA,10UF +/-20%,15V	193623	56289	196D106X0015KA1	3		
C9	CAP,POLY,0.622UF +/-10%,100V	448183	03797	0.22/10/1000-7	1		
C10	CAP,ELECT, 22UF -10/+75%, 16V	436840	89536	436840	1	1	
C11	CAP,POLY, 0.047UF +/-10%, 250V	446773	89536	446773	2		
C12	CAP,MICA,470PF +/-5%,500V	148429	72136	DM19E471J	1		
C13	CAP, MYLAR, 0.047UF +/-10%, 250V	446773	89536	446773	REF		
C14	CAP,POLY,0.1UF +/-10%,2500V	446781	89536	446781	1		
C15	CAP,POLY,0.22UF +/-10%,100V	436113	73445	C280MAH1A220K	1		
C16	CAP,CER,0.01UF +/-20%,100V	149153	56289	C023B101F103M	2		
C17	CAP,CER,500PF +/-10%,500V	105692	56289	C067B102E501K	1		
C18	CAP,TA,2.2UF +/-20%,20V	161927	56289	196D225X0020HA1	1		
C19	CAP,TA,10UF +/-20%,15V	193623	56289	196D106X0015	REF		
C30	CAP,ELECT,220UF -10/+75%,25V	484071	89536	484071	2	1	
C31	CAP,ELECT,220UF -10/+75%,25V	484071	89536	484071	REF		
C32	CAP,ELECT,220UF -10/+75%,16V	435990	89536	435990	1	1	
C33	CAP,TA,10UF +/-20%,15V	193623	56289	196D106X0015	REF		
C34	CAP,CER,0.01UF +/-20%,100V	149153	56289	C023B101F103M	REF		
CR1	DIODE,SI,RECT. 2A,50V	347559	05277	IN5400	1		
CR2	DIODE,SI,LO-CAP,LO-LEAK	348177	07263	FD7223	2	1	
CR3	DIODE,SI,LO-CAP,LO-LEAK	348177	07263	FD7223	REF		
CR9	DIODE,SI,RECT. 1A,100V	343491	01295	IN4002	3		
CR10	DIODE,SI,RECT. 1A,100V	343491	01295	IN4002	REF		
CR11	DIODE,SI,RECT. 1A,100V	343491	01295	IN4002	REF		
DS1	LCD DISPLAY	698381	89536	698381	1	1	
F1	FUSE, FAST-BLO, 2A, 250V						
	AMERICAN SIZE, 1 X 1/4	376582	71400	AGX2	1	5	
	METRIC SIZE, 20MM X 5MM	460972	89536	460972	1	5	
F2	FUSE, FIBRE, 3A, 600V	475004	71400	BBS-3	1	5	
H1	PUSH ROD	479634	89536	479634	1		
H2	GROMMET,POLY	435974	06915	PG-S-2	1	1	
H3	SCREW,RHP,4-40 X 1/4	256156	89536	256156	4		
H4	SCREW, RHP, #5 X 5/16	494641	89536	494641	2		
H5	RIVET	233932	83058	MS49338-2	6		
H6	SCREW,RHP,6-32 X 1/4	385401	89536	385401	2		
H7	INSULATOR	495044	89536	495044	1		
H8	SCREW, RHP, 6-32 X 1/4	385401	89536	385401	REF		
H9	SPACER,STANDOFF	347526	89536	347526	1		
H10	GROMMET	493015	89536	493015	REF		
JA1	RECEPTACLE,AC	471029	89536	471029	1		
MP1	PANEL,FRONT	ORDER	NEXT	HIGHER ASSEMBLY	1		

Table 5-2. A1 Main PCB Assembly (cont)

ITEM NO.	DESCRIPTION	FLUKE STOCK NO.	MFG SPLY CODE	MFG PART NO. OR TYPE	TOT QTY	REC QTY	USE CDE
MP2	SHIELD,TOP	471037	89536	471037	1		
MP3	SHIELD,BOTTOM	471045	89536	471045	1		
MP4	BRACKET,LCD	471730	89536	471730	1		
MP5	BEZEL,LCD	479642	89536	479642	1		
MP6	BUTTON, SWITCH,GREEN	445197	89536	445197	1		
MP7	BUTTON (S4 THRU S7)	425900	89536	425900	2		
MP8	BUTTON (S8 THRU S13)	426759	89536	426759	6		
MP9	SPRING,COMP,SS	422824	84830	LC-0226-3	1	1	
Q1	XSTR, SI, NPN	483859	89536	483859	2	1	
Q2	XSTR, SI, NPN	483859	89536	483859	REF		
Q3	XSTR, SI, NPN	218396	89536	218396	2	1	
Q4	XSTR,SI,PNP	195974	89536	195974	2	1	
Q5	XSTR,SI,PNP	195974	89536	195974	REF		
Q9	XSTR, SI, NPN	218396	89536	218396	REF		
R1	RES,COMP,100K +/-10%,1W	109397	01121	GB1031	1		
R2	RES,COMP,1K +/-10%,2W	474080	01121	HB1021	1		4
R3	RES,MF,1K +/-0.1%,1/8W	474445	91637	CMF551001B	1		
R4	RES,VAR,CRMT,200 +/-10%,1/2W	474973	89536	474973	1	1	
R5	RES,DEP CAR,1M +/-5%,1/4W	348987	80031	CR251-4-5P1MT	2		
R6	RES,DEP.CAR,100 +/-5%,1/4W	348771	80031	CR251-4-5P100ET	1		
R7	RES,MF,900 +/-0.1%,1/8W	461988	89236	461988	1		
R8	RES,MF,90.0 +/-0.1%,1/8W	461970	89536	461970	1		
R9	RES,WW,9.000 +/-0.15%,3W	461962	89536	461962	1		
R10	RES,FXD,0.01 +/-0.25%,1W	461780	80031	461780	1		1
R11	RES,COMP,22M +/-10%,1/2W	108233	01121	HB2251	2		
R12	RES,COMP,22M +/-5%,1/4W	221986	01121	CB2255	1		
R13	RES,DEP CAR,1 +/-5%,1/4W	357665	80031	CR251-4-5PIET	1		
R14	RES,COMP,100K +/-5%,2W	285056	01121	HB1045	1		
R15	RES,DEP CAR,15 +/-5%,1/4W	348755	80031	CR251-4-5PI5ET	1		
R16	RES,COMP,1M +/-10%,1W	109793	01121	GB1051	1		
R17	RES,DEP CAR,220K +/-5%,1/4W	348953	80031	CR251-4-5P220KT	1		
R18	RES,DEP CAR,1K +/-5%,1/4W	343426	80034	CR251-4-5PIKT	1		
R19	RES,VAR,CRMT,5K +/-10%,1/2W	478883	89536	478883	1	1	
R20	RES,DEP CAR,2.2M +/-5%,1/4W	342659	80031	CR251-4-5P2M2T	1		
R21	RES, VAR, 1M +/-10%, 1/2W	485052	89536	485052	1	1	
R22	RES,DEP CAR 470K +/-5%,1/4W	342634	80031	CR251-4-5P470KT	1		
R23	RES,DEP CAR,1M +/-5%,1/4W	348987	80031	CR251-4-5P1MT	REF		
R30	RES,DEP CAR,4.7K +/-5%,1/4W	348821	80031	CR251-4-5P4K7T	1		
R31	RES,DEP CAR,100K +/-5%,1/4W	348920	80031	CR251-4-5P100KT	1		
R32	RES,COMP,22M +/-10%,1/2W	108233	01121	HB2251	REF		
R33	RES,COMP,3.3M +/-5%,1/4W	208389	01121	CB3355	1		
R34	RES, DEP. CAR, 47M +/-10%, 1/2W	146415	89536	146415	1		
RT1	RES, CL, 1K +/-40%, 2W, 25 DEG C	446849	50157	180010200	1		
RV1	VARISTOR,430V +/-10%	447672	09214	V430MA7B	3	1	
RV2	VARISTOR,430V +/-10%	447672	09214	V430MA7B	REF		
RV3	VARISTOR,430V +/-10%	447672	09214	V430MA7B	REF		
S1	SWITCH,POWER	473736	89536	473736	1		
S3	SWITCH SLIDE	453365	34828	G1-116-0001-G20-52	2	1	3
S20	SWITCH,ASSY.(S4 THRU S13)	473322	89536	473322	1		
T1	TRANSFORMER,POWER	ORDER	FOR	CORRECT SOURCE			
	100V,115V SOURCE	461509	89536	461509	1		
	230V SOURCE	461723	89536	461723	1		

Table 5-2. A1 Main PCB Assembly (cont)

ITEM NO.	DESCRIPTION	FLUKE STOCK NO.	MFG SPLY CODE	MFG PART NO. OR TYPE	TOT QTY	REC QTY	USE CDE
U1	RES,NETWORK,10.0M,101K,11.1K	461483	89536	461483	1	1	
U2	RES,NETWORK,.100,.900	461491	89536	461491	1	1	
U3 ⊗	IC, CMOS, 3.5 DIGIT A-D CONVERTER	535369	89536	535369	1	1	
U4	IC,FW. RECT. BRIDGE,50V-1000V,1A	418582	83003	VM08	1	1	
U5	RES,NETWORK,25 DEG.C,+/-5%,1/8W	474999	89536	474999	1	1	
U6 ⊗	IC,COS/MOS,QUAD XOR GATE	355222	89536	355222	1	1	
U7	IC,LIN,2.5V BAND-GAP REF	472845	04713	MC1403V	1	1	
U8	HYBRID RMS CONVERTER	480897	89536	480897	1	1	
VR2	DIODE,ZENER,4.3V	180455	07910	IN749A	1	1	
W1	CONNECTOR,ELASTOMERIC	453092	18565	22989	1		
W10	CONNECTOR,ELASTOMERIC	453092	18565	22989	REF		
XF1	FUSE HOLDER ASSEMBLY	ORDER	FOR	CORRECT SOURCE	1		
	100V,115V SOURCE	487967	89536	487967	1		
	230V SOURCE	487959	89536	487959	1		
XU3	SOCKET,IC,40 PIN	429282	09922	DILB40P-108	1		
Y1	CRYSTAL	ORDER	FOR	CORRECT LINE FREQ.	1		
	60HZ (3.840MHZ) LINE FREQ.	447615	89536	447615	1		2
	50HZ (3.200MHZ) LINE FREQ.	460550	89536	460550	1		2
Y2	CRYSTAL,60HZ,3.89MHZ	447615	89536	483610	1		3
Y3	CRYSTAL,50HZ, 3.200MHZ	460550	89536	460550	1		3

1 THIS PART USED ON THE 8010A ONLY.

2 USED ON 115V, 60HZ AND 230V, 50HZ MODELS

3 USED ON 100V, 50HZ OR 60HZ MODELS

4 WARNING: R2 IS A FUSIBLE RESISTOR, USE EXACT REPLACEMENT TO ENSURE SAFETY!

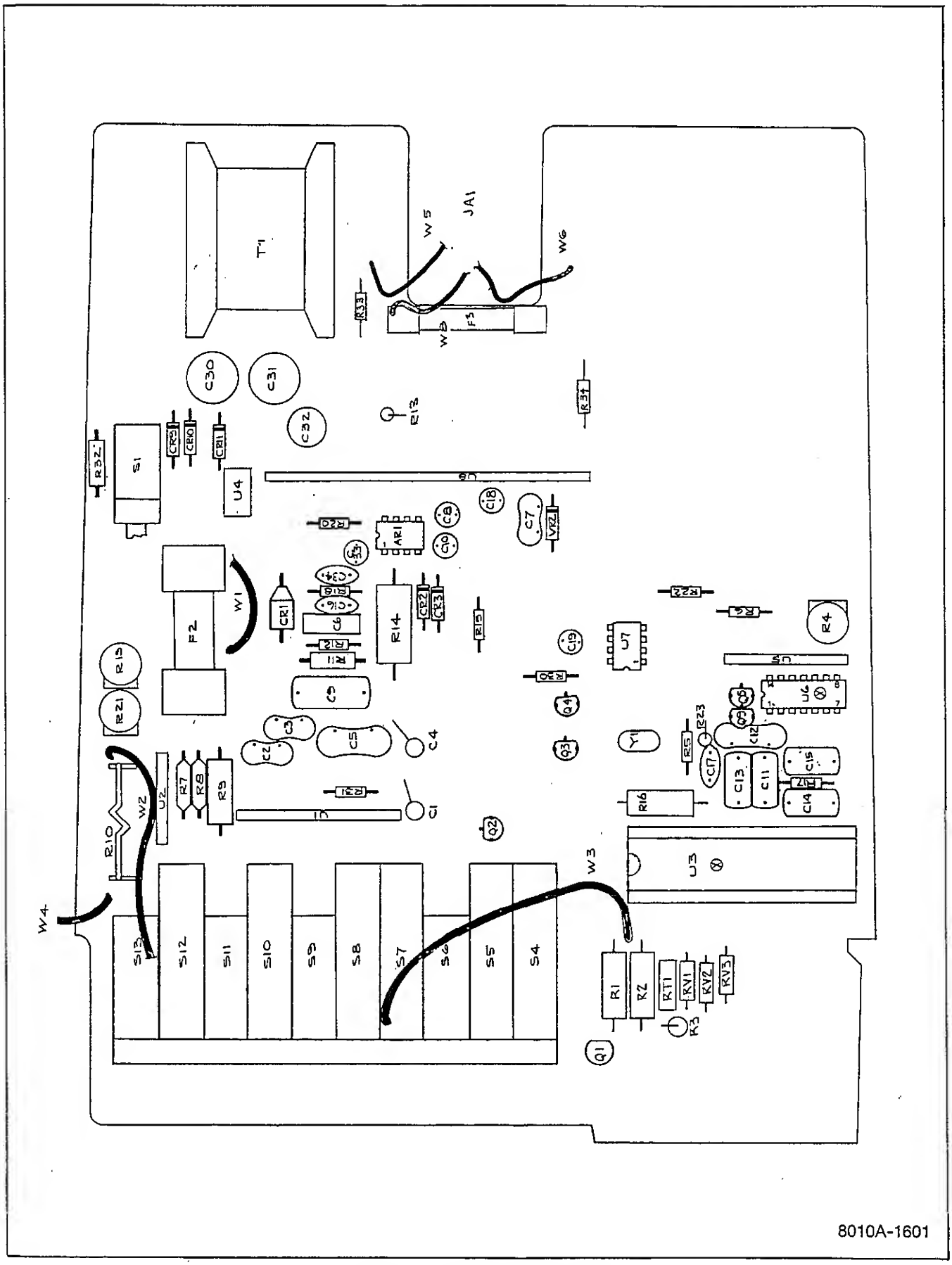

8010A-1601

Figure 5-2. A1 Main PCB Assembly

Table 5-3. A2 Low Ohms PCB Assembly

ITEM NO.	DESCRIPTION	FLUKE STOCK NO.	MFG SPLY CODE	MFG PART NO. OR TYPE	TOT QTY	REC QTY	USE CDE
A2	LOW OHMS PCB ASSY FIGURE 5-3 (8012A-4101)						
C50	CAP, CER, 300PF +/-10%, 500V	105734	71590	BB60301KW7W	1		
C51	CAP,CER,0.01 UF +/-20%,100V	149153	56282	C023B101F103M	1		
CR50	DIODE, RECT, 1000V, 1.5A	296236	05277	IN5054	1	1	
CR51	DIODE, HI-SPEED SW	203323	07910	1N4448	2	1	
CR52	DIODE, HI-SPEED SW	203323	07910	1N4448	REF		
H1	GROMMET	493601	89536	493601	1		
J1	CONNECTOR, 7-COND	484030	00779	1-583773-4	1		
MP1	SPACER, STANDOFF	376228	89536	376228	3		
MP2	ROD, ACTUATOR	479626	89536	479626	1		
Q50	XSTR, SI, NPN, HI-VOLT, TO-92	370684	04713	MPS A42	1	1	
Q51	XSTR, SI, NPN, #1V	381731	04713	MPS V10	2	1	
Q52	XSTR, SI, NPN, #1V	381731	04713	MPS V10	REF		
R50	RES, COMP, 1.5M +/-5%, 1/4W	182857	01121	CB1555	1		
R51	RES, COMP, 39K +/-10%, 2W	109983	01121	HB3931	2		
R52	RES, COMP, 39K +/-10%, 2W	109983	01121	HB3931	REF		
R53	RES, COMP, 6.8K +/-5%, 1/4W	148098	01121	CB6825	1		
R54	RES, DEP CAR, 20K +/-5%, 1/4W	441477	80031	CR251-4-5P20K	2		
R55	RES, DEP CAR, 20K +/-5%, 1/4W	441477	80031	CR251-4-5P20K	REF		
R56	RES, MF, 113 +/-0.1%, 1/8W	484238	91637	CMF551130B	1		
R57	RES, VAR, CRMT, 20 +/-10%, 1/2W	285114	89536	285114	1	1	
R58	RES, VAR, 50K +/-20%, 1/2W	501601	89536	501601	1	1	
R59	RES, HI-VOLT, 100K +/-1%, 7W	484097	89536	484097	1		
R60	RES, MF, 1M +/-1%, 1/8W	268797	91637	CMF551004F	1		
R61	RES, DEP CAR, 91K +/-5%, 1/4W	441709	80031	CR251-4-5P91KT	1		
R62	RES, DEP CAR, 470 +/-5%, 1/4W	343434	80031	CR251-4-5P470E	1		
R63	RES, DEP CAR, 1.3M +/-5%, 1/4W	442558	80031	CR251-4-5P1M3	1		
R64	RES, COMP, 4.7M +/-5%, 1/4W	220046	01121	CB4755	1		
R65	RES, DEP.CAR, 8.2K +/-5%, 1/4W	441675	80031	CR251-4-5P8K2	1		
R66	RES, DEP. CAR, 2.2K +/-5%, 1/4W	343400	80031	CR251-4-5P2K2	1		
U50	IC, LIN, OP AMP, METAL CAN	288928	12040	LM308AH	1	1	
U51	IC, LIN, OP AMP, DUAL COMP, 8PDP	418566	89536	418566	1	1	
VR50	IC, LIN, LO-VOLTAGE REG	452771	89536	452771	1	1	
VR51	DIODE, ZENER, 6.8V 5%, 0.5W	453019	07910	1N5235B	1		
W51	WIRE, ASSY	487637	89536	487637	1		

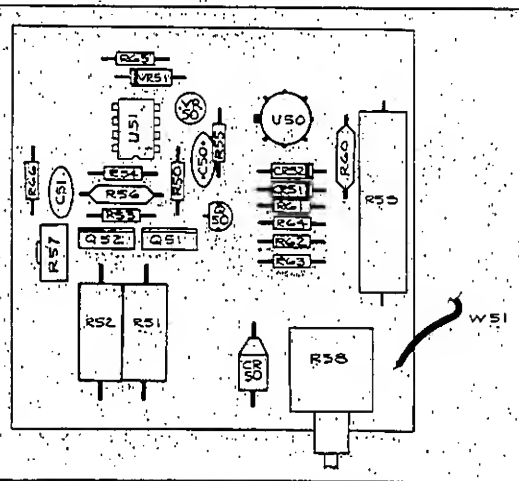

Figure 5-3. A2 Low Ohms PCB Assembly

Table 5-3. Federal Supply Codes for Manufacturers

00779	Amp, Inc. Harrisburg, Pennsylvania
01121	Allen-Bradley Co. Milwaukee, Wisconsin
01295	Texas Instruments, Inc. Semiconductor Components Div. Dallas, Texas
02735	RCA Corp. Solid State Div. Somerville, New Jersey
03797	Genisco Technical Corp. Compton, California
04713	Motorola Semiconductor Products, Inc. Phoenix, Arizona
05277	Westinghouse Electric, Corp. Youngwood, Pennsylvania
07263	Fairchild Semiconductor Div. of Fairchild Camera & Instrument Corp. Mountain View, California
07910	Teledyne Corp. (Continental Device) Hawthorne, California
09214	G.E. Semi-Conductor Products Dept. Auburn, New York
09922	Burndy Corp. Norwalk, Connecticut
11503	Keystone Mfg. Div. of Avis Industrial Corp. Warren, Michigan
12040	National Semiconductor Corp. Danbury, Connecticut
14099	Semtech Corp. Newbury Park, California
18324	Signetics Corp. Sunnyvale, California
18565	Chomerics, Inc. Woburn, Maine
30035	Jolo Industries, Inc. Garden Grove, California
34828	C-W Industries Southhampton, Pennsylvania
50157	Midwest Components, Inc. Muskegon, Michigan
52072	Circuit Assembly Corp. Costa Mesa, California
52763	Stettner-Trush, Inc. Cazenovia, New York
53217	Technical Wire Products, Inc. Santa Barbara, California
56282	Utek Systems, Inc. Olathe, Kansas
56289	Sprague Electric Co. North Adams, Massachusetts
71400	Bussmann Mfg. Div. of McGray-Edison Co. St. Louis, Missouri
71590	Centrelab Electronic Div. of Globe Union Milwaukee, Wisconsin
72136	Electro Motive Mfg. Co. Williamantic, Connecticut
72982	Erie Tech, Products, Inc. Erie, Pennsylvania
73445	Amperex Electronic Corp. Hicksville, New York
73734	Federal Screw Products, Inc. Chicago, Illinois
78189	Shakeproof Div. of Illinois Tool Works Elgin, Illinois
80031	Mepco Div. of Sessions Clock Co. Morristown, New Jersey
83003	Varo, Inc. Garland, Texas
83553	Associated Spring Barnes Group, Inc. Gardens, California
89536	Fluke, John Mfg. Co., Inc. Seattle, Washington
91502	Associated Machine Santa Clara, California
91637	Dale Electronics, Inc. Columbus, Nebraska

TECHNICAL SERVICE CENTERS

U.S.A.

CA, Burbank
John Fluke Mfg. Co., Inc.
(213) 849-4641

CA, Santa Clara
John Fluke Mfg. Co., Inc.
(408) 727-8121

CO, Denver
John Fluke Mfg. Co., Inc.
(303) 750-1228

FL, Orlando
John Fluke Mfg. Co., Inc.
(305) 896-2296

IL, Rolling Meadows
John Fluke Mfg. Co., Inc.
(312) 398-5800

MA, Burlington
John Fluke Mfg. Co., Inc.
(617) 273-4678

MD, Rockville
John Fluke Mfg. Co., Inc.
(301) 770-1576

NJ, Paramus
John Fluke Mfg. Co., Inc.
(201) 262-9550

TX, Dallas
John Fluke Mfg. Co., Inc.
(214) 233-9945

WA, Everett
John Fluke Mfg. Co., Inc.
(206) 356-5560

Other Countries

Argentina, Buenos Aires
Coasin S.A.
Tel: 552-5248/3485
TLX: 122284 COASN AR

Australia, Concord
Elmeasco Instruments Pty Ltd.
Tel: (02) 736-2888
TLX: (790) 25887

Australia, Mount Waverley
Elmeasco Instruments Pty Ltd.
Tel: 03-233-4044
TLX: 36206

Australia, Brisbane
Elmeasco Instruments Pty Ltd.
Tel: (07) 229-3161

Austria, Vienna
Walter Rekirsch Electronische Gerate
GmbH & Co.
Tel: (0222) 235555
TLX: 134759

Belgium, Brussels
Fluke (Belgium) SA/NA
Tel: (02) 2164090
TLX: 26312

Brazil, Sao Paulo
Fluke Brasil-Industria E Comercio Ltda.
Tel: (011) 421-3603
TLX: 01135589 FLKE BR

Canada, Calgary, AB
Allan Crawford Associates Ltd.
Tel: (403) 230-1341

Canada, Burnaby, BC
Allan Crawford Associates Ltd.
Tel: (604) 294-1326

Canada, Mississauga, ON
Allan Crawford Associates Ltd.
Tel: (416) 678-1500

Canada, St. Laurent, PQ
Allan Crawford Associates Ltd.
Tel: (514) 731-8564

Chile, Santiago
Intronica Chile Ltda.
Tel: 44940
TLX: 240301

China, Beijing
Beijing Radio Research Institute
Tel: 445612

Colombia, Bogota
Sistemas E Instrumentacion, Ltda.
Tel: 232-45-32
TLX: 45787 COASN CO

Denmark, Ballerup
Tage Olsen A/S
Tel: (02) 658111
TLX: 35293 TOAS SK

Ecuador, Quito
Edificio "Jerico"
Tel: 529684, 526759
TLX: 2865 Protec Ed

Egypt, Cairo
Electronic Engineering Liaison Office
Tel: 691588
TLX: (927) 92502

England, Watford, Herts
Fluke (Great Britain) LTD
Tel: 44-923-40511
TLX: 934583

Finland, Kauniainen
Oy Findip AB
Tel: (0) 5052255
TLX: 123129

France, BUC
M.B. Electronique S.A.
Tel: (01) 9568131
TLX: 695414

Greece, Athens
Hellenic Scientific Representations
Tel: (01) 711140
TLX: 219330

Hong Kong, Hong Kong
Schmidt & Co. (H.K.) Ltd.
Tel: 5-455644
TLX: 74766 SCHMC HX

India, Bombay
Hinditron Services Pvt. Ltd.
Tel: 811316, 815344
TLX: 953-112326 HSPL IN

India, Bangalore
Hinditron Services Pvt. Ltd.
Tel: 33139
TLX: 0845741

India, New Delhi
Hinditron Services Pvt. Ltd.
Tel: 619118
TLX: 031 4890 SRMP IN

Indonesia, Jakarta Selatan
P.T. Dwi Tunggal Jaya Sakti
Tel: 716374
TLX: 47308 DIJS IA

Israel, Ramat Hasharon
R.D.T. Electronics Engineering Ltd.
Tel: (03) 483216
TLX: 32143

Italy, Milan
Sistrel S.p.A.
Tel: (02) 6181893
TLX: 334643

Italy, Rome
Sistrel S.p.A.
Tel: (06) 5915551
TLX: 68356

Japan, Tokyo
John Fluke Mfg. Co., Inc.
Japan Branch
Tel: (03) 434-0181
TLX: (781) 2424331 (FLUKJPJ)

Korea, Seoul
Electro-Science Korea Co.
Tel: 261-7702, 260-1908
TLX: K25381

Malaysia, Petaling Jaya
Mecomb Malaysia SDN BHD
Tel: 573455
TLX: MA37605

Mexico, Mexico D.F.
Electronica y Tecnologia
Avanzada S.A. de C.V. (ETA)
Tel: 393 09 02 or 393 57 62
TLX: 0172697 BLOSME

Netherlands, Maarssen
Fluke (Nederland) B.V.
Tel: (030) 436514
TLX: 47128

Netherlands, Tilburg
Fluke (Holland) B.V.
Tel: (013) 673973
TLX: 52237

New Zealand, Auckland
McLean Information Technology, Ltd.
Tel: 501-801, 501-219, 587-037
TLX: NZ21570 THERMAL

Norway, Oslo
Morgenstierne & Co A/S
Tel: (02) 356110
TLX: 71719

Pakistan, Karachi
Pak International Operations
Tel: 221127, 239052
TLX: 24494 PIO PK

Peru, Lima
Importaciones Y Representaciones
Electronicas S.A.
Tel: 288650
TLX: 37425663

Philippines, Metro Manila
Spark Radio & Electronics Corp.
Tel: 78-78-16
TLX: 27901 RLA PH

Portugal, Lisboa
Decada-Equipamentos de
Electronica, Lda.
Tel: (19) 574984
TLX: 18469

Republic of Singapore, Singapore
Rank O'Connor's (PTE) Limited
Tel: 637944, 239052
TLX: OCONSIN RS21023

Republic of South Africa, Bramley
Fluke S.A. (Pty) Ltd.
Tel: (011) 786-3170
TLX: 424328

Spain, Alcorcon (Madrid)
Hispano Electronics S.A.
Tel: (01) 6194108
TLX: 22404/42634

Sweden, Vallingby
Teleinstrument AB
Tel: (08) 380370
TLX: 15770

Switzerland, Zurich
Traco Electronic AG
Tel: (01) 2010711
TLX: 54318

Taiwan, Taipei
Schmidt Scientific Far East Ltd.
Tel: 5414600
TLX: 11111 Schmidt

Thailand, Bangkok
Measuretronix Ltd.
Tel: 3143369, 3143430
TLX: 81143 DEJOBKK TH

Turkey, Istanbul
Erkman Elektronik Aletler
Tel: (01) 5461
TLX: 23353

Uruguay, Montevideo
Coasin Uruguaya S.R.L.
Tel: 29-31-952
TLX: UY 6571 OROCUER

Venezuela, Caracas
Coasin, C.A.
Tel: 38-78-42, 38-78-86
TLX: 21027 EMVEN VE

West Germany, Ismaning
Fluke (Deutschland) GmbH
Tel: (089) 96050
TLX: 0522472

FLUKE®
John Fluke Mfg. Co., Inc., P.O. Box C9090, Everett, WA 98206
Fluke (Holland) B.V., P.O. Box 5053, 5004 EB, Tilburg, The Netherlands. Phone (013) 673973
Litho in U.S.A. 4/84

Section 6
Options and Accessories

TABLE OF CONTENTS

OPTION/ MODEL NUMBER	DESCRIPTION	PAGE
	ACCESSORIES	
Y8205	Soft Carrying Case	600-1
C-86	Ruggedized Carrying Case	600-1
M00-200-611	Offset Mounting Kit	600-2
M00-200-612	Center Mounting Kit	600-2
M00-200-613	Dual Mounting Kit	600-2
80T-H	Touch-Hold Probe	600-2
80T-150C	Temperature Probe, °C	600-2
80T-150F	Temperature Probe, °F	600-2
80i-400	AC Current Probe	600-2
80i-600	AC Current Probe	600-2
80J-10	Current Shunt	600-3
80K-6	High Voltage Probe	600-3
80K-40	High Voltage Probe	600-3
83RF	RF Probe	600-4
85RF	RF Probe	600-4
Y8100	DC/AC Current Probe	600-4
Y8101	AC Current Transformer	600-4
Y8133	Deluxe Test Lead Kit	600-4
Y8140	Slim-Flex Test Leads	600-4
	OPTIONS	
-01	Rechargeable (Ni-Cad) Battery Option	601-I

6-1. INTRODUCTION

6-2. This section of the manual contains information concerning the options and accessories available for use with your Multimeter. This information is divided into subsections. All of the accessories are in one subsection, and the options are presented in separate subsections. To facilitate locating a section, the paragraph and page numbers correspond with the option number. For example, the paragraph and page numbers for Option 8010A-01 or Option 8012A-01 start from 601-1. All the accessory paragraph and page numbers start from 600-1. A list of replaceable parts and illustrations showing the part location and its reference designator are provided with each option section.

Accessories

600-1. INTRODUCTION

600-2. This subsection describes the basic use of the accessories available for your Multimeter. For more detailed information, refer to the instruction sheet included with each accessory. When ordering an accessory, include its model name and number.

600-3. SOFT CARRYING CASE Y8205

600-4. The Model Y8205 Soft Carrying Case (shown in Figure 600-1) is designed for the storage and transport of the Multimeter. The case provides adequate protection against normal handling and storage conditions. In addition to a shoulder strap, the Y8205 includes a storage compartment for test leads, power cord, and other compact accessories.

600-5. RUGGEDIZED CARRYING CASE C86

600-6. The Model C86 Ruggedized Carrying Case (shown in Figure 600-2) is a molded polyethylene carrying case designed to provide maximum protection against rough handling and adverse environmental conditions. The C86 contains a separate storage compartment for test leads, power cord, and other compact accessories.

600-7. RACK MOUNTING KITS

600-8. Introduction

600-9. Three rack mounting kits are available for mounting your instrument in a standard 19-inch equipment rack. The kits allow the Multimeter to be mounted in the center, offset, or side-by-side (Dual) in a standard 19-inch equipment rack.

600-10. Installation

600-11. Installation instructions for the rack mounting kits are given in the following paragraphs.

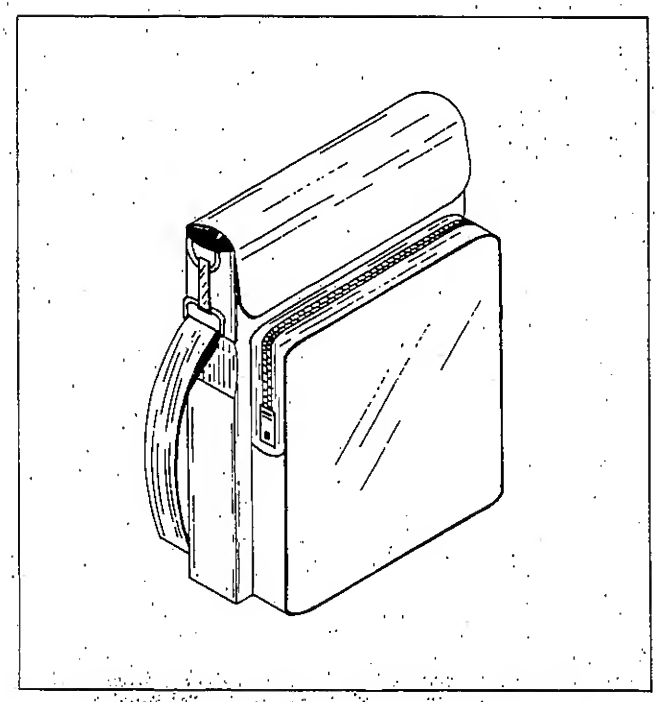

Figure 600-1. Model Y8205 Carrying Case

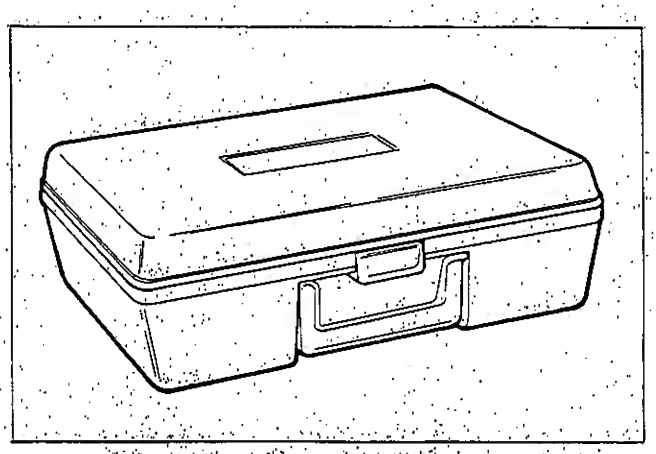

Figure 600-2. Model C86 Carrying Case

600-12. OFFSET AND CENTER MOUNTING KITS M00-200-611 AND M00-200-612

600-13. Use the following procedure to install an Multimeter using the center mounting or the offset mounting kit:

1. Remove the carrying handle by removing the handle disc decals and then the handle mounting screws.

2. Remove the screw from the rear of the case and remove the case.

3. Install the side mounting brackets as shown in Figure 600-3, and secure them to the mounting panel using the nuts provided.

4. Insert the front of the case through the opening on the back side of the mounting panel.

5. Replace the handle mounting screws through the side brackets into the mounting bosses. Do not overtighten these screws.

6. Slide the instrument through the mounting panel and into the case. Replace the retaining screw at the rear of the case.

600-14. DUAL MOUNTING KIT M00-200-613

600-15. Use the following procedure to install two Multimeters, side-by-side, using the Dual Mounting Kit:

1. Remove the carrying handles from both instruments by removing the handle disc decals and then the handle mounting screws.

2. Remove the retaining screw from the rear of the cases and separate the instruments from their cases.

3. Install the center mounting bracket as shown in Figure 600-4 and secure it to the mounting panel using the nuts provided.

4. Install the clamp screw in the center mounting bracket using the nuts and washers provided.

5. Insert the front of the instrument cases through the openings on the back side of the mounting panel. Make sure the cases' handle mounting bosses are inserted into the clamp hole of the center mounting bracket.

6. Tighten the clamp screws.

7. Install the side mounting brackets and secure them to the front panel using the nuts provided.

8. Replace the handle mounting screws through the side brackets into the handle mounting bosses. Do not overtighten these screws.

9. Slide the instruments through the mounting panel and into their cases. Replace the retaining screw at the rear of both cases.

600-16. PROBE ACCESSORIES

600-17. The probe accessories are shown in Figure 600-5 and are described in the following paragraphs. Table 600-1 contains all applicable specifications for the probes.

600-18. Touch-Hold Probe 80T-H

600-19. The 80T-H is a direct signal-through test probe with a touch and hold feature. Touch and Hold allows voltage, resistance, and conductance readings to be held on the DMM display following the measurement. This convenience promotes greater safety because the operator can concentrate on the placement of the probe and read the display later. The Touch and Hold feature is activated by a push button located on the probe. Pressing this push button holds the present reading on the DMM display until the push button is released.

600-20. Temperature Probe, Celsius 80T-150C

600-21. The 80T-150C Temperature Probe converts your instrument into a direct-reading (1 mV dc/degree) Celsius thermometer. It is suited for surface, ambient, and some liquid measurements. A rugged, fast-responding probe tip with a 350V dc standoff capability makes the 80T-150C a versatile and easy-to-use temperature probe.

600-22. Temperature Probe, Fahrenheit 80T-150F

600-23. The 80T-150F is the as the 80T-150C except the 80T-150F is set to read in degrees Fahrenheit.

600-24. AC Current Probe 80i-400

600-25. The Model 80i-400 Current Probe extends the maximum 2A ac current range of the Multimeter to 400A. The clamp-on, 1000 turn transformer design allows you to measure current without breaking the circuit under test. The Multimeter displays the current measurement as 1/1000th of the actual current in the circuit (e.g., a display reading of 5 mA is equal to 5A of current in the circuit.)

600-26. AC Current Probe 80i-600

600-27. The Model 80I-600 Current Probe extends the maximum 2A ac current measuring limit of the Multimeter to a maximum of 600A. The clamp-on transformer design allows measurements to be made without breaking the circuit under test. Because of a high-efficiency, quadrature-type of winding, wire size and location of the conductor within the transformer jaws do not affect the accuracy of the current measurement.

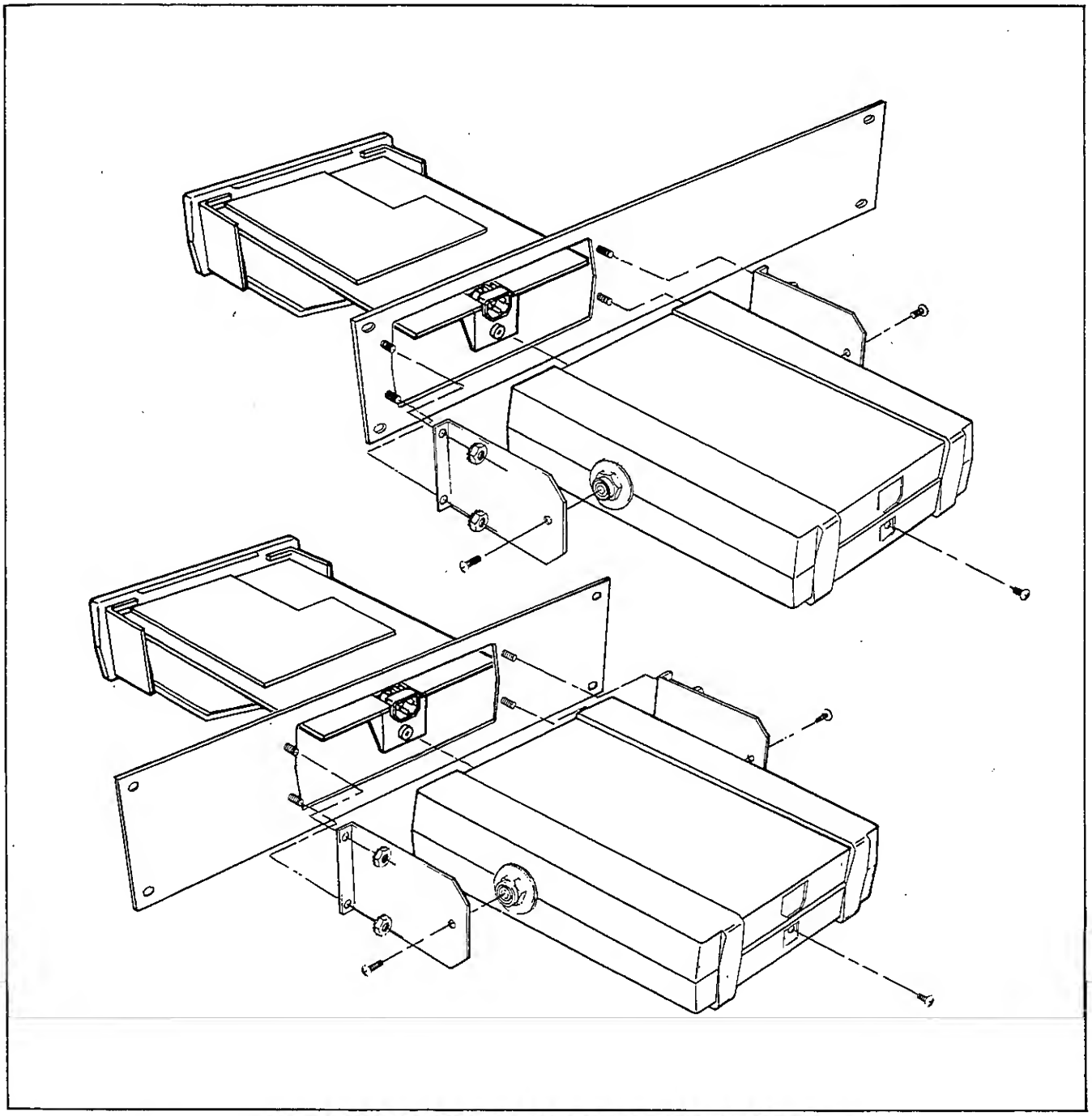

Figure 600-3. Rack Mounting Kits, Offset and Center Mounting

600-28. Current Shunt 80J-10

600-29. The Model 80J-10 Current Shunt extends the current measuring capability of the 8010A to 10A continuous (20A for periods not exceeding 1 minute) dc to 10 kHz at an accuracy of ± 0.25%.

600-30. High Voltage Probe 80K-6

600-31. The Model 80K-6 High Voltage Probe extends the voltage measuring capability of your meter up to 6 kV. Internally, the probe contains a 1000:1 divider. The divider is made with thick-film resistors which have matched temperature coefficients, to provide excellent accuracy and stability characteristics for this probe. Also, the very high input impedance (75 MΩ) minimizes circuit loading, thus contributing to measurement accuracy. The plastic housing provides for operator safety while measuring potentially dangerous voltages.

600-32. High Voltage Probe 80K-40

600-33. The Model 80K-40 High Voltage Probe extends the voltage measuring capability of your meter up to 40

kV. Internally, the probe contains a 1000:1 divider. The divider is made with special metal film resistors with matched temperature coefficients, providing the probe with excellent accuracy and stability characteristics. Also, the very high input impedance (1000 MΩ) minimizes circuit loading, thus contributing to measurement accuracy. The plastic housing provides for operator safety while measuring potentially dangerous voltages.

600-34. RF Probe 83RF

600-35. The 83RF converts your Multimeter into a high frequency, 100 kHz to 100 MHz, ac voltmeter over a voltage range of 0.25V to 30V rms. The DC output of the probe is calibrated to be equivalent to the rms value of a sine wave. The probe is used with the DC V function and ranges of the Multimeter.

600-36. RF Probe 85RF

600-37. The 85RF converts your Multimeter into a high frequency, 100 kHz to 500 MHz, ac voltmeter over a voltage range of 0.25V to 30V rms. The dc output of the probe is calibrated to be equivalent to the rms value of a sine wave. The probe is used with the DC V function and ranges of the Multimeter.

600-38. DC/AC Current Probe Y8100

600-39. The Model Y8100 DC/AC Current Probe is a battery-powered (four AA cells) Hall-Effect probe for use with your Multimeter to take dc, ac, or composite (ac and dc) current measurements. The clamp-on jaws on the Y8100 allow it to clamp around conductors up to 3/4-inch in diameter. The pistol shape allows safe, easy, one-hand operation when making current measurements. The Y8100 has detachable leads and is used in conjunction with the voltage inputs of the Multimeter.

600-40. AC Current Transformer Y8101

600-41. The Model Y8101 Current Transformer is a small clamp-on current transformer designed to extend the current measuring capability of your Multimeter up to 150A. A clamp-on coil designed into the probe allows measurements to be made without breaking the circuit under test. This coil serves as the secondary of a 1:1000 transformer. The current-carrying conductor being measured serves as the primary.

600-42. Deluxe Test Lead Set Y8133

600-43. The Model Y8133 Deluxe Test Lead Set includes two probes with sharp tips, two alligator clips, two spade lugs, and a spring-loaded hook tip. Probes contain finger guards for additional protection.

600-44. Slim-Flex Test Leads Y8140

600-45. The Model Y8140 Test Lead Set consists of one red and one black 60-inch (1.52 meter) test lead, each with a standard banana plug on one end and an extendible tip probe on the other end. This flexible metallic tip conductor may be extended up to 2-1/2 inches, and is insulated to within 1/10 of an inch of its tip. This insulation reduces the chance of creating an inadvertent short circuit while using the probes in their extended position. Although the Y8140 test leads are intended for measuring voltages, they may also be used for measuring low currents.

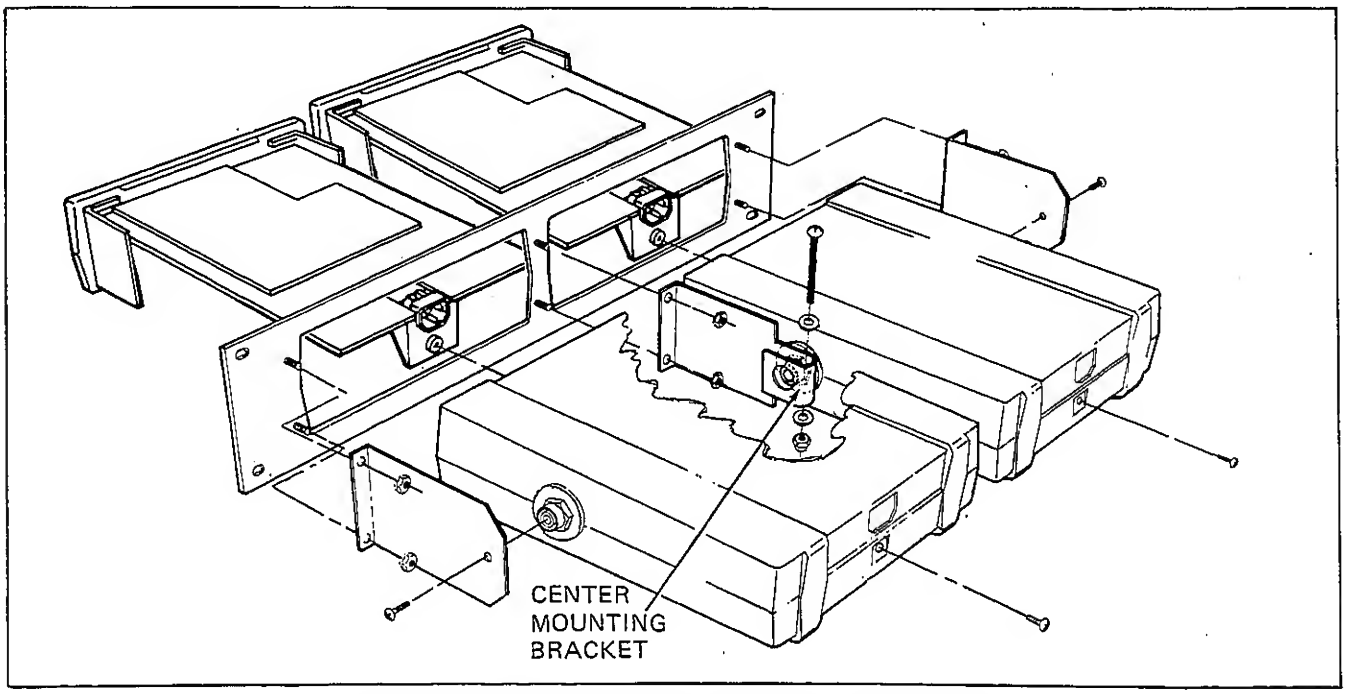

Figure 600-4. Rack Mounting Kit, Side-by-Side Mounting

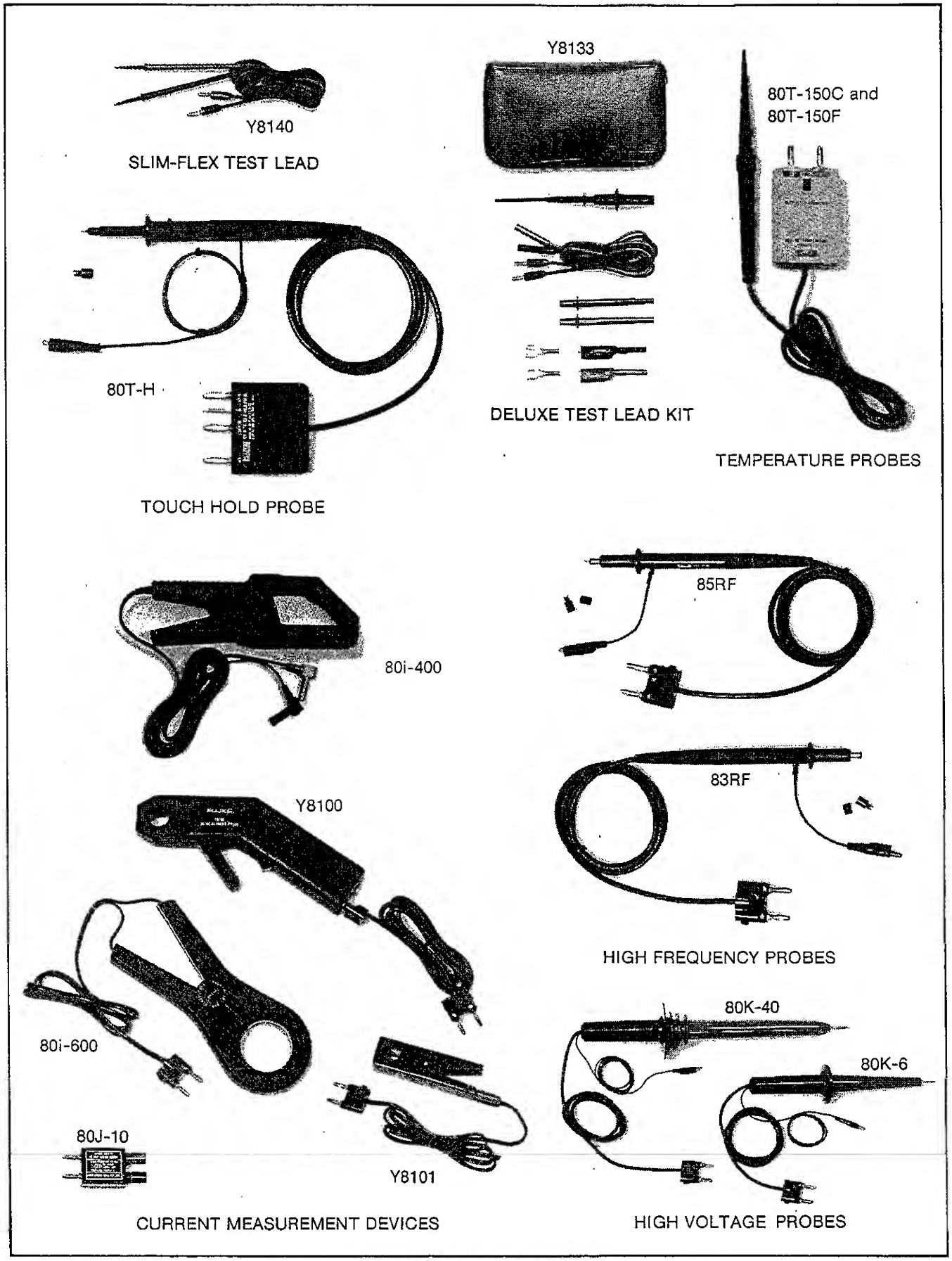

Figure 600-5. Probe Accessories

Table 600-1. Probe Accessories Specifications

80T-H TOUCH-HOLD PROBE

Voltage Ratings	
TIP TO COMMON	1000V dc or peak ac maximum
COMMON TO GROUND	60V dc or 42V peak ac maximum
Input Capacitance	150 pF maximum
Lead Resistance	0.5Ω maximum

80T-150C AND 80T-150F TEMPERATURE PROBES

Range (°C/°F)	50°C to +150°C/-58°F to 302°F
Accuracy	±1°C (1.8°F) from 0°C to 100°C, decreasing linearly to ±3°C (5.4°F) at -50°C and +150°C
Sensitivity	1 mV dc/°C or °F
Resolution	0.1°C or 0.1°F recommended maximum
Voltage Standoff	350V dc or peak ac
Power	Internal disposable battery; 1.000 hours of continuous use

80I-400 AC CURRENT PROBE

Range	1A to 400A
Accuracy	±(3% + 0.4A) 48 Hz to 440 Hz ±(4% + 0.4A) 440 Hz to 1000 Hz
Output	1 milliamp per ampere of input current (1 mA/A)
Working Voltage	660V ac rms maximum
Maximum Conductor Size	1 ea. 30 mm (1.18") or 2 ea. 25 mm (0.98")
Shunt (load) Resistance	Less than 12 ohms at multimeter input to maintain specified accuracy
Typical Bandwidth	-10% at 40 Hz and 5 kHz (1A, 400 Hz reference, excludes multimeter response)
Usable Current Range	0.1A to 600A, 5 seconds maximum above 400A
Safety	Protection Class II as defined in IEC 348 and ANSI C39.5

80I-600 AC CURRENT PROBE

Range	1 to 600A ac
Accuracy	±3%
Frequency Response	30 Hz to 1 kHz, 10 kHz typical
Division Ratio	1000:1
Working Voltage	750V rms maximum
Insulation Dielectric Withstand Voltage	5 kV
Maximum Conductor Size	2-inch diameter

80J-10 CURRENT SHUNT

Shunt	10 amps at 100 mV
Accuracy (18°C to 28°C)	
DC TO 10 KHZ	±0.25%
10 KHZ-100 KHZ	Rising to 1 dB at 100 kHz typical
Temperature Coefficient	0.005%/°C
Inductance	8.3 nH in series w/0.01Ω shunt
Overload	Up to one minute at 20A with a 1/4 duty cycle for recovery after currents between 10A and 20A
Connects to	3/4 inch center banana jacks
Connectors	5-way binding posts (red and black)

Table 600-1. Probe Accessories Specifications (cont)

80K-6 HIGH VOLTAGE PROBE

Voltage Range	0 to 6 kV, dc or peak ac
Input Impedance	75 MΩ (nominal)
Division Ratio	1000:1
Accuracy	
DC TO 500 HZ	±1%
500 HZ TO 1 KHZ	±2%
ABOVE 1 KHZ	Output reading falls. Typically, 30% at 10 kHz.

80K-40 HIGH VOLTAGE PROBE

Voltage Range	1 kV to 40 kV dc or peak ac, 28 kV rms ac
Input Resistance	1000 MΩ
Division Ratio	1000:1
Accuracy Dc (overall)	20 kV to 30 kV ±2% (calibrated at 25 kV)
UPPER LIMIT	Changes linearly from 2% at 30 kV to 4% at 40 kV
LOWER LIMIT	Changes linearly from 2% at 20 kV to 4% at 1 kV
Accuracy Ac (Overall)	±5% at 60 Hz

83RF HIGH FREQUENCY PROBE

AC-to-DC Ratio	1:1
Ratio Accuracy (at 1 MHz and loaded with 10 MΩ)	
ABOVE 1V	±1 dB
BELOW 1V	±1.5 dB
Frequency Response (Relative to 1 MHz)	100 kHz to 100 MHz ± 1 dB
Extended Frequency Response	Useful for relative readings from 20 kHz to 250 MHz
Response	Responds to the peak value of an input and is calibrated to read rms value of a sine wave
Voltage Range	0.25 to 30V rms
Maximum Input Voltage	30V rms, 200V dc
Input Capacitance	Approximately 3 pF
Temperature Range	
OPERATING	+10°C to +35°C
STORAGE	-40°C to +75°C
Humidity	<90% R.H.
Output Connector	Fits standard 0.75-inch dual banana connectors
Accessory	BNC to Probe Adapter, P/N 574756

85RF HIGH FREQUENCY PROBE

AC-to-DC Ratio	1:1
Ratio Accuracy (At 1 MHz and loaded with 10 mΩ	
ABOVE 0.5V	±0.5 dB
BELOW 0.5V	±1.0 dB
Frequency Response (Relative to 1 MHz)	100 kHz to 100 MHz ±.5 dB *100 MHz to 200 MHz ±1.0 dB *200 MHz to 500 MHz ±3.0 dB *Referred to high and low inputs at probe tip.
Extended Frequency Response	Useful for relative readings from 20 kHz to 700 MHz
Response	Responds to the peak value of an input and is calibrated to read rms value of a sine wave
Voltage Range	0.25 to 30V rms
Maximum Input Voltage	30V rms, 200V dc

Table 600-1. Probe Accessories Specifications (cont)

Input Capacitance	Approximately 3 pF
Temperature Range	
OPERATING	+10°C to +35°C
STORAGE	-40°C to +75°C
Humidity	<90% R.H.
Output Connector	Fits standard 0.75-inch dual banana connectors
Accessory	BNC to Probe Adapter, P/N 574756
Y8100 DC/AC CURRENT PROBE	
Ranges	20A ac or dc 200A ac or dc
Rated Output	2V at full range
Accuracy	
DC TO 200 HZ	±2% of range
200 HZ TO 1 KHZ	<100A add ±3% reading >100A add ±6% reading
Calibration Cycle	1 year
Frequency Response	dc to 1.0 kHz
Recommended Load	≥3.0 kΩ
Temperature Range	+15°C to +35°C; for specified accuracy -10°C to +50°C; storage and operation at reduced accuracy.
Heating Limitation	Prolonged operation above 200A ac or 1 kHz can cause damage to the Y8100.
Working Voltage Rating	Core to output; 600V dc or 480V ac maximum output to ground; 42V dc or 30V ac
Aperture Size	3/4-inch (19 mm) diameter
Size-Overall	9"x4-1/2"x1-7/16" (230 mm x 115 x 37 mm)
Weight	14 ounces (0.4 kg), with batteries
Power	Four AA cells
Battery Life	Alkaline 20 hours continuous
Y8101 AC CURRENT TRANSFORMER	
Current Range	2A to 150A
ACCURACY, (48 Hz to 10 kHz)	±2%, 10A to 150A ±8%, 2A to 10A
Division Ratio	1000:1
Working Voltage	300V ac rms maximum
Insulation Dielectric Withstand Voltage	3 kV rms
Maximum conductor Size	7/16-inch (1.11 cm)

-01 Option
Rechargeable Battery Option

601-1. INTRODUCTION

601-2. The Rechargeable Battery Option (801XA-01) for the 8010A and the 8012A replaces the standard Multimeter power supply with a power supply that will operate from rechargeable batteries or line power. If the batteries are fully charged, your Multimeter will operate for 15 hours (typical) before the batteries must be recharged.

601-3. SPECIFICATIONS

601-4. The specifications for the Rechargeable Battery Option are given in Table 601-1. All other specifications are equivalent to those given for the Multimeters in Section 1 of this manual.

601-5. OPERATION

WARNING

DO NOT OPERATE YOUR 801XA-01 WITH THE BATTERIES REMOVED.

601-6. Operation of an 801XA-01 differs in three respects from the operation the standard Multimeter: battery charging, the BT annunciator on the display, and line-frequency noise rejection.

601-7. Battery Charging

601-8. To recharge the batteries, connect your Multimeter to line power and set the POWER switch to the OFF position. If the POWER switch is set to the ON position, the batteries receive a reduced charge that is sufficient to maintain their charge level but insufficient to charge the batteries to a higher level.

601-9. BT Annunciator

601-10. The BT (Battery Charge) annunciator will appear in the upper-left corner of the LCD when the battery charge reaches an insufficient level. (The BT annunciator also appears briefly during power-down.) After the BT annunciator appears, your Multimeter may be used for 1/2 hour (typical) before its accuracy is degraded.

Table 601-1. 8010A/8012A Specifications

8010A/8012A BATTERY OPTION:

BATTERIES: TYPE: NiCAD
OPERATING TIME: 15 to 30 hours typical (actual time depends on function(s) used)
RECHARGE TIME: (with POWER switch in OFF position): 14 hours for full charge

POWER CONSUMPTION: 3.5W max.

LINE VOLTAGE: 90-264V, 50 Hz or 60 Hz, high or low level line voltage is field selectable (see procedure).

STANDARDS: IEC 348: Protection Class 1 when operated from supply mains
Protection Class 2 when operated from internal batteries

601-11. Line Frequency Noise Rejection

601-12. Noise rejection can be selected for 50 Hz or 60 Hz line frequencies. The line frequency, as set at the factory, is indicated on a decal attached to the bottom of your Multimeter. Refer to the Line Frequency Selection procedure, given later in this section, to change the noise rejection frequency.

601-13. THEORY OF OPERATION

601-14. The theory of operation of the Multimeter is illustrated by the Main PCB Assembly schematic in Section 7. The battery power supply is shown above the standard power supply on the schematic. The Multimeter can be used with line voltage from 90V to 264V, 50 Hz or 60 Hz (To select the proper line voltage configuration, refer to the AC Line Voltage procedure, given later in this subsection.) Fuse F3 provides protection for the power supply. Line power input is rectified, filtered, and regulated. The output of the power supply acts as a current source for the battery. The battery determines the voltage level into the power converter. Do not operate your Multimeter with the battery removed. The power converter uses the flyback transformer technique to develop several output voltages so that +11.5, -11.5, +2.9 and -6.5V (with respect to power supply common) are available.

601-15. MAINTENANCE

WARNING

THESE SERVICING INSTRUCTIONS ARE FOR USE BY QUALIFIED PERSONNEL ONLY. TO AVOID ELECTRICAL SHOCK, DO NOT PERFORM ANY SERVICING OTHER THAN THAT CONTAINED IN THE OPERATING INSTRUCTIONS UNLESS YOU ARE QUALIFIED TO DO SO.

601-16. Battery Replacement

601-17. Use the following procedure for removing and replacing batteries:

1. Complete the Calibration Access procedure given in Section 4 of this manual.
2. Turn the instrument upside down.
3. Unplug the red and black battery wires from the pcb pins.
4. Apply pressure to the front and rear sides of the battery case to disconnect the case from the Main PCB Assembly.
5. Remove the blotting paper.
6. Replace the batteries and blotting paper with a new Fluke battery assembly.
7. Reconnect the battery case to the Main PCB Assembly.
8. Connect the battery wires to their appropriate pins on the main pcb, with red to + and black to -.
9. Reinstall the instrument in its case.

601-18. Fuse Replacement

601-19. Use the following procedure to replace the main power fuse, F3:

1. Complete the Calibration Access procedure given in Section 4 of this manual.
2. F3 is located immediately in front of the power receptacle. Replace F3 with a 1/32A, 250V, type MDL fuse.

601-20. AC Line Voltage Selection

601-21. Use the following procedure to change the operating ac line voltage on the 8010A-01 or 8012A-01:

NOTE

If the change in operating voltage also changes the line frequency refer to the Line Frequency Selection procedure, given later in this section.

1. Complete the Calibration Access procedure given in Section 4 of this manual.
2. Refer to Figure 601-1 for the location of the ac line switch S2, on the Main PCB Assembly.
3. Set S2 to the 110V or 220V position depending upon the intended line voltage.
4. Reinstall the case and relabel the ac line voltage designation on the decal at the bottom of the instrument.

601-22. Line Frequency Selection

601-23. Use the following procedure to change the line frequency noise rejection on the 8010A-01 or 8012A-01:

1. Complete the Calibration Access procedure given in Section 4 of this manual.
2. Refer to Figure 601-1 for the location of the line frequency selection switch S3, on the Main PCB Assembly.
3. Set S3 to the 50 Hz or 60 Hz position depending upon the intended line frequency.

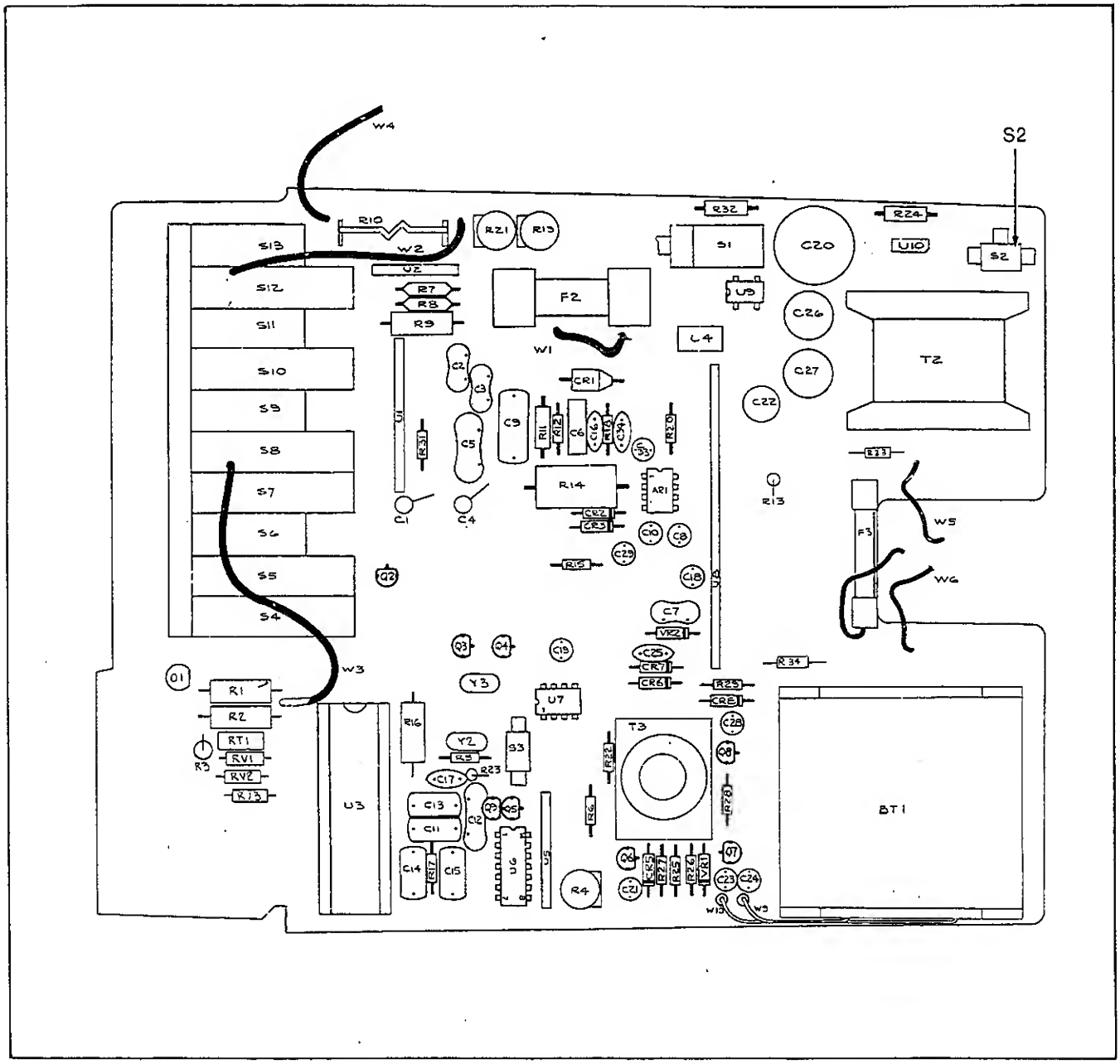

Figure 601-1. Line Switch (S2) Location

601-24. POWER SUPPLY CHECK

601-25. Use the following procedure to verify the proper power supply voltages of the 8010A-01 or 8012A-01:

1. Remove the ac line power cord from the UUT. If necessary, charge the battery of your Multimeter before removing the cord.

2. On the UUT, set the POWER switch to ON position.

3. On the UUT, select the DC V function, 200V range.

4. Verify a display reading of "00.0" +0.1V.

5. With the DMM, verify the power supply voltages for each test point (TP) listed in Table 601-1. The voltages given under the heading Voltage Levels are with respect to ground, unless otherwise indicated. (Ground is provided at TP6.)

601-26. LIST OF REPLACEABLE PARTS

601-27. Table 601-2 lists the replaceable parts for the 8010A-01 and 8012A-01 Multimeters. Figures 601-1 and 601-2 show the component locations for 8010A-01 and 8012A-01 Multimeters.

Table 601-2. A1 Main PCB Assembly (-01 Option)

ITEM NO.	DESCRIPTION	FLUKE STOCK NO.	MFG SPLY CODE	MFG PART NO. OR TYPE	TOT QTY	REC QTY	USE CDE
A1 ⊘	MAIN PCB ASSY, -01 OPTION FIGURE 601-2 (8010A-4011)	ORDER	NEXT	HIGHER ASSY			
AR1	IC,LIN OP-AMP	418780	12040	LF351N	1	1	
BT1	BATTERY ASSY	487975	89536	487975	1		
C1	CAP,VAR,1.5PF-0.25PF,200V	218206	72982	530-000	2	1	
C2	CAP,MICA,150PF +/-5%,500V	148478	72136	DM15F151J	2		
C3	CAP,MICA,120PF +/-5%,500V	148486	72136	DM15F121J	1		
C4	CAP,VAR,1.5PF-0.25PF,200V	218206	72982	530-000	REF		
C5	CAP,MICA,2200PF +/-5%,500V	148346	72136	DM19F222J	REF		
C6	CAP,MYLAR,0.047UF +/-10%,250V	162008	73445	C280AMAE47K	1		
C7	CAP,MICA,150PF +/-5%,500V	148478	72136	DM15F151J	REF		
C8	CAP,TA,10UF +/-20%,15V	193623	56289	196D106X0015KA1	3		
C9	CAP,POLY,0.622UF +/-10%,100V	448183	03797	0.22/10/1000-7	1		
C10	CAP, ELECT, 22UF -10/+75%, 16V	436840	89536	436840	1	1	
C11	CAP, POLY, 0.047UF +/-10%, 100V	446773	89536	446773	2		
C12	CAP,MICA,470PF +/-5%,500V	148429	72136	DM19E471J	1		
C13	CAP, MYLAR, 0.047UF +/-10%, 100V	446773	89536	446773	REF		
C14	CAP,POLY,0.1UF +/-10%,2500V	446781	89536	446781	1		
C15	CAP,POLY,0.22UF +/-10%,100V	436113	73445	C280MAH1A220K	1		
C16	CAP,CER,0.01UF +/-20%,100V	149153	56289	C023B101F103M	2		
C17	CAP,CER,500PF +/-10%,500V	105692	56289	C067B102E501K	1		
C18	CAP,TA,2.2UF +/-20%,20V	161927	56289	196D225X0020HA1	1		
C19	CAP,TA,10UF +/-20%,15V	193623	56289	196D106X0015	REF		
C20	CAP, ELECT, 2200UF +75/-10%, 16V	474981	89536	474981	1	1	
C21	CAP, ELECT, 22UF +75/-10%, 16V	436840	89536	436840	2	1	
C22	CAP, ELECT, 2200UF +75/-10%, 16V	435990	89536	435890	1	1	
C23	CAP, TA, 2.2UF +/-20%, 20V	161927	56289	1960225X0020HA1	2		
C24	CAP, TA, 2.2UF +/-20%, 20V	161927	56289	1960225X0020HA1	REF		
C25	CAP, CER, 1000PF +/-10%, 500V	357806	56289	C016B102G102K	1		
C26	CAP, ELECT, 220UF +75/-10%, 16V	435990	89536	435990	2	1	
C27	CAP, ELECT, 220UF +75/-10%, 16V	435990	89536	435990	REF		
C28	CAP, ELECT, 22UF +75/-10%, 16V	436840	89536	436840	REF		
C29	CAP, TA, 10UF +/-20%, 15V	193623	56289	196D106X0015KA1	1		
C33	CAP,TA,10UF +/-20%,15V	193623	56289	196D106X0015	REF		
C34	CAP,CER,0.01UF +/-20%,100V	149153	56289	C023B101F103M	REF		
CR1	DIODE,SI,RECT. 2A,50V	347559	05277	IN5400	1		
CR2	DIODE,SI,LO-CAP,LO-LEAK	348177	07263	FD7223	2	1	
CR3	DIODE,SI,LO-CAP,LO-LEAK	348177	07263	FD7223	REF		
CR5	DIODE, HI-SPEED SW	203323	07910	1N4448	2	1	
CR6	DIODE, SI, RECT, 1A	343491	01295	1N4002	2	1	
CR7	DIODE, SI, RECT, 1A	343491	01295	1N4002	REF		
CR8	DIODE, HI-SPEED SW	203323	07910	1N4448	REF		
DS1	LCD DISPLAY	698381	89536	698381	1		
F1	FUSE, FAST-BLO, 2A, 250V						
	AMERICAN SIZE, 1 X 1/4	376582	71400	AGX2	1	5	
	METRIC SIZE, 20MM X 5MM	460972	89536	460972	1	5	
F2	FUSE, FIBRE, 3A, 600V	475004	71400	BBS-3	1	5	
F3	FUSE, SLO-BLO, 1/32A	163022	71400	MDL1-32	1	5	
H1	PUSH ROD	479634	89536	479634	1		
H2	GROMMET,POLY	435974	06915	PG-S-2	1	1	
H3	SCREW,RHP,4-40 X 1/4	256156	89536	256156	4		

Table 601-2. A1 Main PCB Assembly (-01 Option) (cont)

ITEM NO.	DESCRIPTION	FLUKE STOCK NO.	MFG SPLY CODE	MFG PART NO. OR TYPE	TOT QTY	REC QTY	USE CDE
H4	SCREW, RHP, #5 X 5/16	494641	89536	494641	2		
H5	RIVET	233932	83058	MS49338-2	6		
H6	SCREW,RHP,6-32 X 1/4	385401	89536	385401	2		
H7	INSULATOR	495044	89536	495044	1		
H8	SCREW, RHP, 6-32 X 1/4	385401	89536	385401	REF		
H9	SPACER,STANDOFF	347526	89536	347526	1		
H10	GROMMET	493015	89536	493015	REF		
J1	CONN, PCB	233411	00779	60599-3	1		
JA1	RECEPTACLE,AC	471029	89536	471029	1		
MP1	PANEL,FRONT	ORDER	NEXT	HIGHER ASSEMBLY	1		
MP2	SHIELD,TOP	471037	89536	471037	1		
MP3	SHIELD,BOTTOM	471045	89536	471045	1		
MP4	BRACKET,LCD	471730	89536	471730	1		
MP5	BEZEL,LCD	479642	89536	479642	1		
MP6	BUTTON, SWITCH,GREEN	445197	89536	445197	1		
MP7	BUTTON (S4 THRU S7)	425900	89536	425900	2		
MP8	BUTTON (S8 THRU S13)	426759	89536	426759	6		
MP9	SPRING,COMP,SS	422824	84830	LC-0226-3	1	1	
MP10	RETAINER, BATTERY	471052	89536	471052	1		
MP11	PAD, ABSORBENT	483610	89536	483610	1		
MP13	HEAT SINK	473785	13103	6046PB	1		
Q1	XSTR, SI, NPN	483859	89536	483859	4	1	
Q2	XSTR, SI, NPN	483859	89536	483859	REF		
Q3	XSTR, SI, NPN	483859	89536	483859	REF		
Q4	XSTR,SI,PNP	195974	89536	195974	2	1	
Q5	XSTR,SI,PNP	195974	89536	195974	REF		
Q6	XSTR, SI, PNP	523647	07910	MPS6651	1	1	
Q7	XSTR, SI, NPN	168716	89536	168716	1	1	
Q8	XSTR, SI, PNP	195974	89536	195974	1	1	
Q9	XSTR, SI, NPN	483859	89536	483859	REF		
R1	RES,COMP,100K +/-10%,1W	109397	01121	GB1031	1		
R2	RES,COMP,1K +/-10%,2W	474080	01121	HB1021	1		
R3	RES,MF,1K +/-0.1%,1/8W	474445	91637	CMF551001B	1		
R4	RES,VAR,CRMT,200 +/-10%,1/2W	474973	89536	474973	1	1	
R5	RES,DEP CAR,1M +/-5%,1/4W	348987	80031	CR251-4-5P1MT	2		
R6	RES,DEP.CAR,100 +/-5%,1/4W	348771	80031	CR251-4-5P100ET	1		
R7	RES,MF,900 +/-0.1%,1/8W	461988	89236	461988	1		
R8	RES,MF,90.0 +/-0.1%,1/8W	461970	89536	461970	1		
R9	RES,WW,9.000 +/-0.15%,3W	461962	89536	461962	1		
R10	RES,FXD,0.01 +/-0.25%,1W	461780	89536	461780	1		
R11	RES,COMP,22M +/-10%,1/2W	108233	01121	HB2251	2		
R12	RES,COMP,22M +/-5%,1/4W	221986	01121	CB2255	1		
R13	RES,DEP CAR,1 +/-5%,1/4W	357665	80031	CR251-4-5P1ET	1		
R14	RES,COMP,100K +/-5%,2W	285056	01121	HB1045	1		
R15	RES,DEP CAR,15 +/-5%,1/4W	348755	80031	CR251-4-5P15ET	1		
R16	RES,COMP,1M +/-10%,1W	109793	01121	GB1051	1		
R17	RES,DEP CAR,220K +/-5%,1/4W	348953	80031	CR251-4-5P220KT	1		
R18	RES,DEP CAR,1K +/-5%,1/4W	343426	80034	CR251-4-5P1KT	1		
R19	RES,VAR,CRMT,5K +/-10%,1/2W	478883	89536	478883	1	1	

Table 601-2. A1 Main PCB Assembly (-01 Option) (cont)

ITEM NO.	DESCRIPTION	FLUKE STOCK NO.	MFG SPLY CODE	MFG PART NO. OR TYPE	TOT QTY	REC QTY	USE CDE
R20	RES,DEP CAR,2.2M +/-5%,1/4W	342659	80031	CR251-4-5P2M2T	1		
R21	RES, VAR, 1M +/-10%, 1/2W	485052	89536	485052	1	1	
R22	RES,DEP CAR 470K +/-5%,1/4W	342634	80031	CR251-4-5P470KT	1		
R23	RES,DEP CAR,1M +/-5%,1/4W	348987	80031	CR251-4-5P1MT	REF		
R24	RES, COMP, 8.2 +/-5%, 1/2W	159590	01121	EB8G25	1		
R25	RES, DEP CAR, 3.3K +/-5%, 1/4W	348813	80031	CR251-4-5P3K3	1		
R26	RES, DEP CAR, 47 +/-5%, 1/4W	441592	80031	CR251-4-5P47E	1		
R27	RES, DEP CAR, 1 +/-5%, 1/4W	357665	80031	CR251-4-5P1E	1		
R28	RES, DEP CAR, 100 +/-5%, 1/4W	348771	80031	CR251-4-5P100E	1		
R29	RES, DEP CAR, 4.7K +/-5%, 1/4W	348821	80031	CR251-4-5P4K7	1		
R30	RES,DEP CAR,4.7K +/-5%,1/4W	348821	80031	CR251-4-5P4K7T	1		
R31	RES,DEP CAR,100K +/-5%,1/4W	348920	80031	CR251-4-5P100KT	1		
R32	RES,COMP,22M +/-10%,1/2W	108233	01121	HB2251	REF		
R33	RES,COMP,3.3M +/-5%,1/4W	208389	01121	CB3355	1		
R34	RES, DEP. CAR, 47M +/-10%, 1/2W	146415	89536	146415	1		
RT1	RES, CL, 1K +/-40%, 2W, 25 DEG C	446849	50157	180010200	1		
RV1	VARISTOR,430V +/-10%	447672	09214	V430MA7B	3	1	
RV2	VARISTOR,430V +/-10%	447672	09214	V430MA7B	REF		
RV3	VARISTOR,430V +/-10%	447672	09214	V430MA7B	REF		
S1	SWITCH,POWER	473736	89536	473736	1		
S2	SWITCH, SLIDE	453365	34828	G1-116-0001-G20-52	2	1	
S3	SWITCH, SLIDE	453365	34828	G1-116-0001-G20-52	REF		
S20	SWITCH,ASSY.(S4 THRU S13)	473322	89536	473322	1		
T2	XFMR, POWER	490110	89536	490110	1		
T3	XFMR, DC-DC CONVERTER	478453	89536	478453	1		
U1	RES,NETWORK,10.0M,101K,11.1K	461483	89536	461483	1	1	
U2	RES,NETWORK,.100,.900	461491	89536	461491	1	1	
U3⊗	IC, CMOS, 3.5 DIGIT AC CONVERTER	535369	89536	535369	1	1	
U4	IC,FW. RECT. BRIDGE,50V-1000V,1A	418582	83003	VM08	1	1	
U5	RES,NETWORK,25 DEG.C,+/-5%,1/8W	474999	89536	474999	1	1	
U6⊗	IC,COS/MOS,QUAD XOR GATE	355222	89536	355222	1	1	
U7	IC,LIN,2.5V BAND-GAP REF	472845	04713	MC1403V	1	1	
U8	HYBRID RMS CONVERTER	480897	89536	480897	1	1	
U9	RECT, BRIDGE, 1A, 50V	418582	89536	418582	1	1	
U10	IC, LIN VOLTAGE REGULATOR	473793	12040	LM317MP	1	1	
VR1	DIODE, ZENER	473744	07910	1N5240	1	1	
VR2	DIODE,ZENER,4.3V	180455	07910	IN749A	1	1	
W1	CONNECTOR,ELASTOMERIC	453092	18565	22989	1		
W10	CONNECTOR,ELASTOMERIC	453092	18565	22989	REF		
XF1	FUSE HOLDER ASSEMBLY	ORDER	FOR	CORRECT SOURCE	1		
	100V,115V SOURCE	487967	89536	487967	1		
	230V SOURCE	487959	89536	487959	1		
XF3	CLIP, FUSE	485219	91833	3529	2		
XU3	SOCKET,IC,40 PIN	429282	09922	DILB40P-108	1		
Y2	CRYSTAL,60HZ,3.89MHZ	447615	89536	483610	1		
Y3	GRYSTAL,50HZ, 3.200MHZ	460550	89536	460550	1		

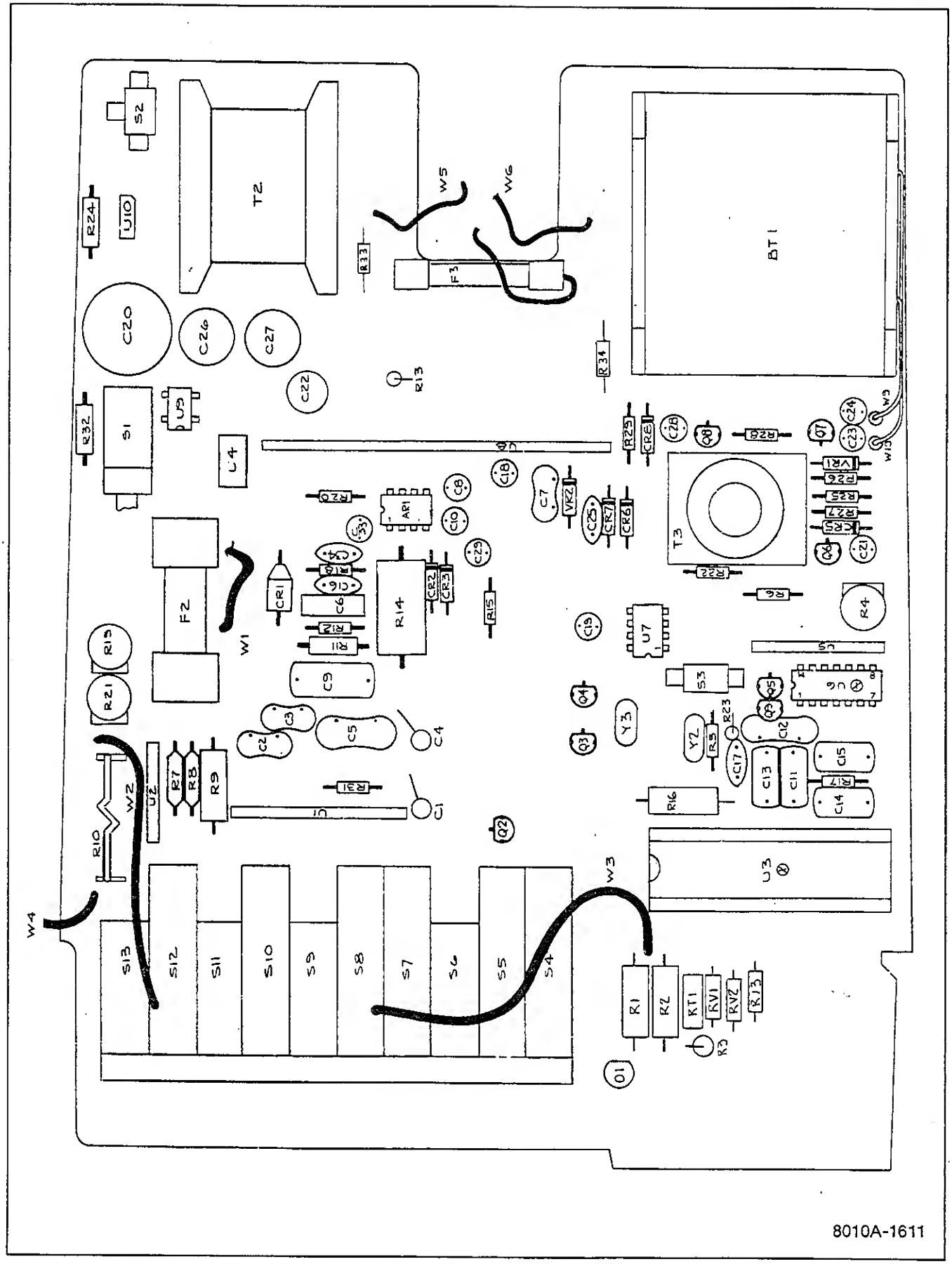

8010A-1611

Figure 601-2. A1 Main PCB Assembly (-01 Option)

Section 7
Schematic Diagrams

TABLE OF CONTENTS

FIGURE NO.	TITLE	PAGE
7-1	A1 Main PCB Assembly	7-2
7-2	A2 Low Ohms PCB Assembly	7-4
7-3	Custom IC (U3) Block Diagram	7-5

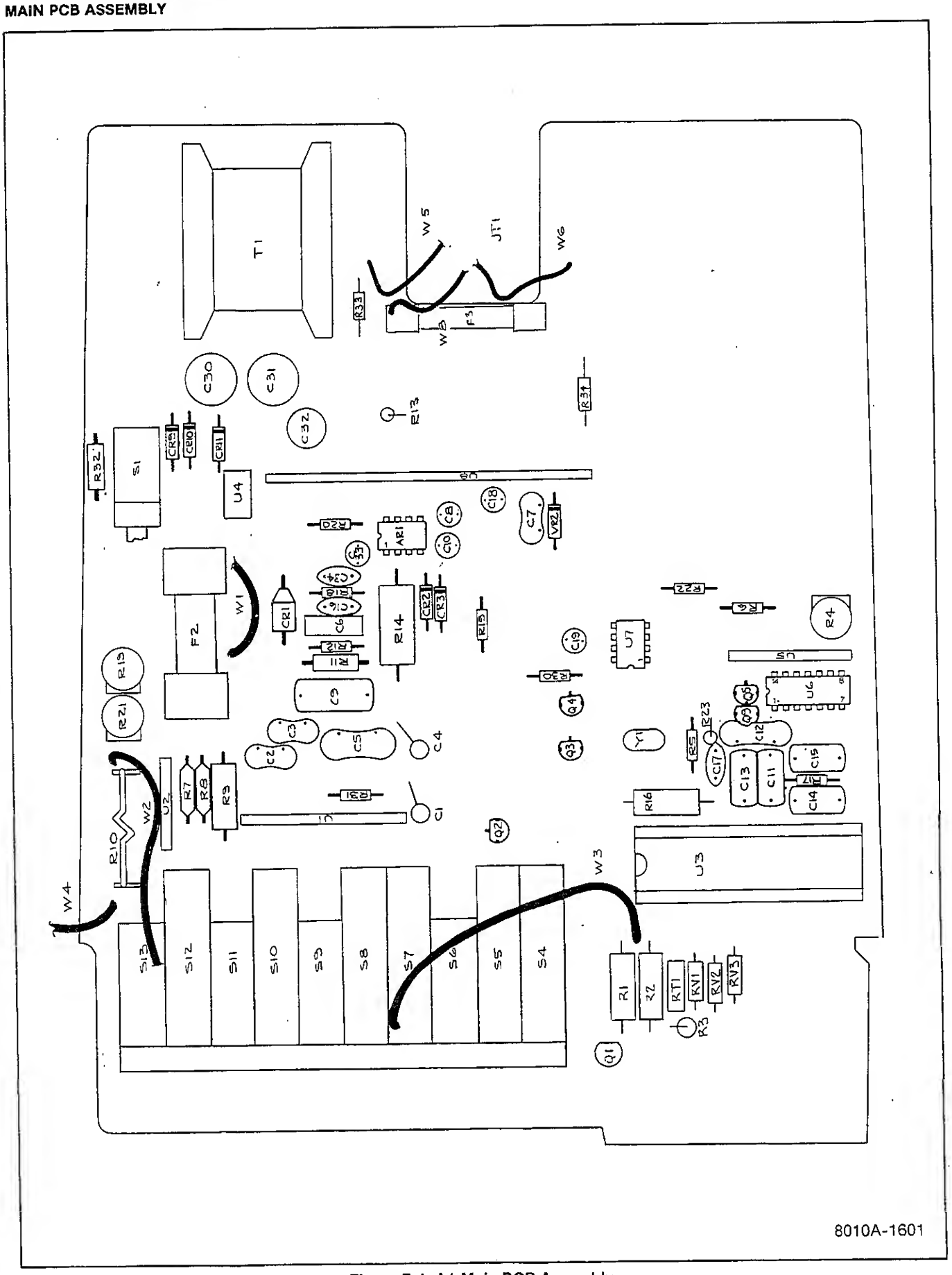

Figure 7-1. A1 Main PCB Assembly

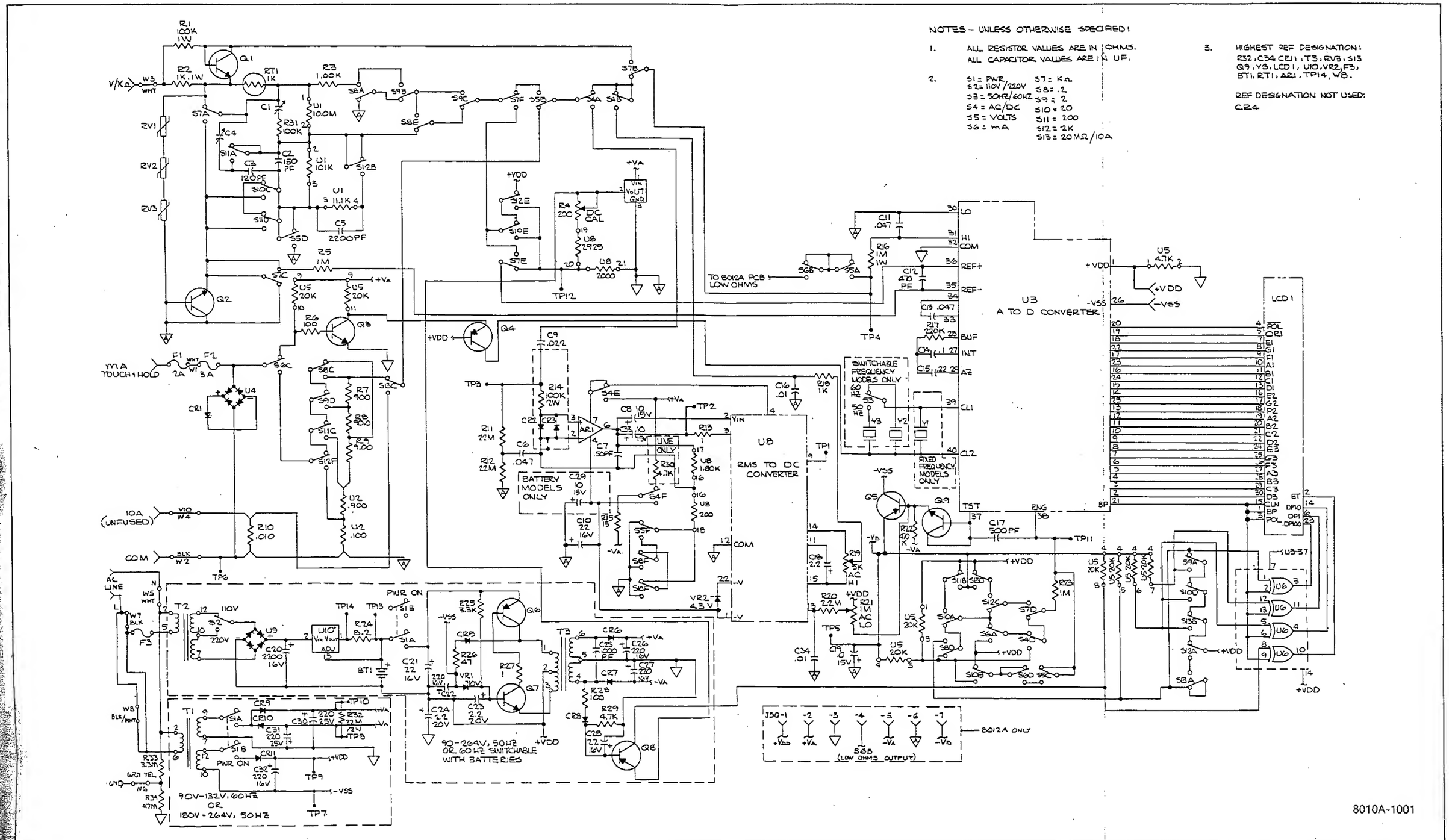

Figure 7-1. A1 Main PCB Assembly (cont)

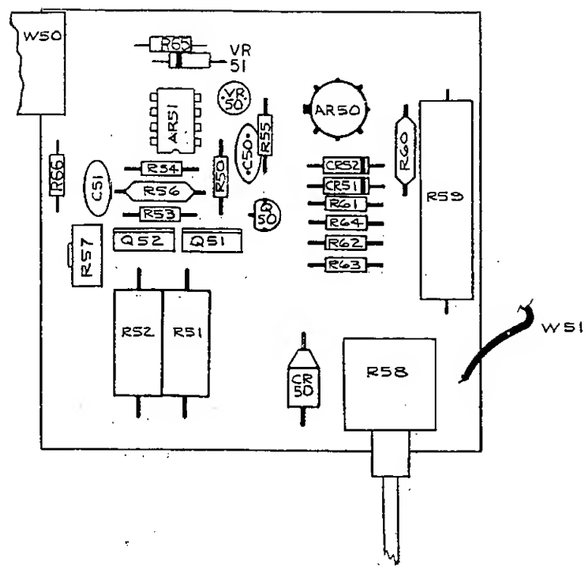

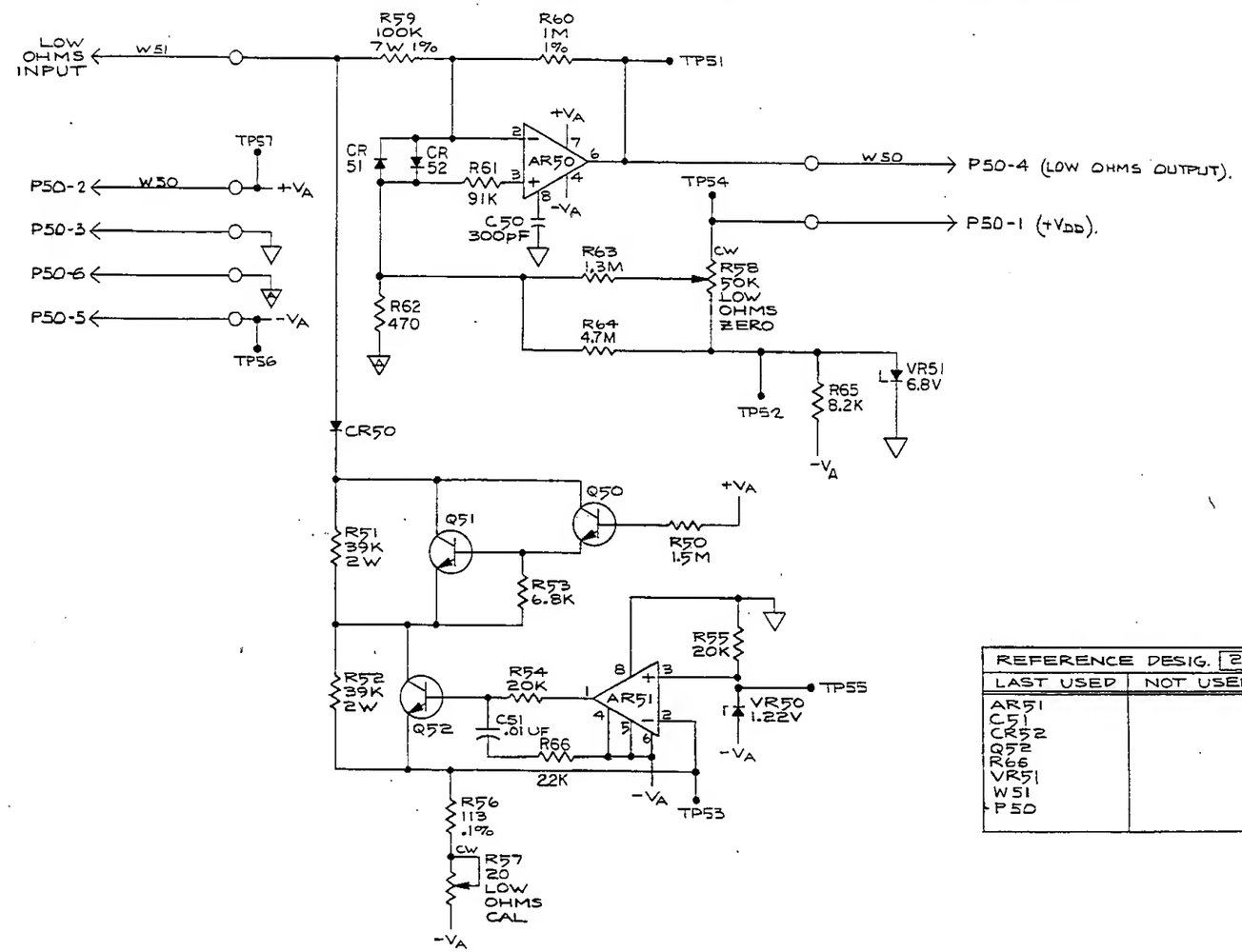

REFERENCE DESIG. 2	
LAST USED	NOT USED
AR51	
C51	
CR52	
Q52	
R66	
VR51	
W51	
P50	

NOTES: UNLESS OTHERWISE SPECIFIED

1. ALL RESISTORS RATED IN OHMS, 1/4W, 5%.

2. REFERENCE DESIGNATIONS ARE FROM 50 THRU 100.

8012A-1701

8012A-1101

Figure 7-2. A2 Low Ohms PCB Assembly

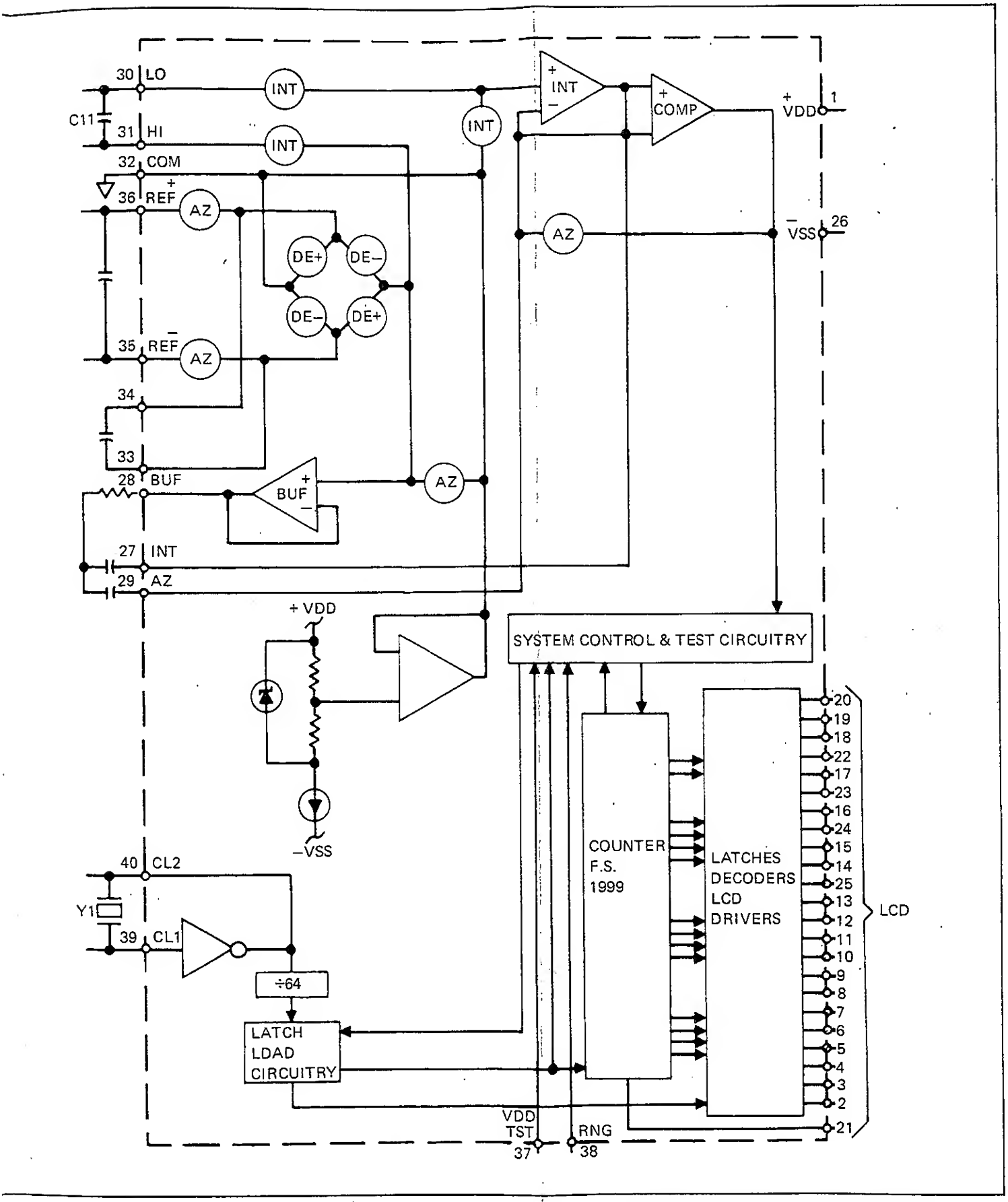

Figure 7-3. Custom IC (U3) Block Diagram